WUSD RIVER CITY HIGH SCHOOL

ESSR III
1 RAIDER LANE
WEST SACRAMENTO, CA 95691
WASHINGTON UNIFIED SCHOOL DISTRICT

DSA File No. 57-H5
App. No. 02-122281
PTN. 72694-127

DRAWING INDEX

SHT. NO.	DESCRIPTION
GENERAL	
A0.1	COVER SHEET
A0.2	GENERAL NOTES
A0.3	ARCHITECTURAL SYMBOLS AND ABBREVIATIONS
A0.5	CODE ANALYSIS SITE PLAN
CIVIL	
C0.0	CIVIL GENERAL NOTE AND ABBREVIATIONS
C0.1	TOPOGRAPHIC SURVEY
C1.1	DEMOLITION PLAN
C2.1	GRADING AND PAVING PLAN
C3.1	UTILITY PLAN
C4.1	DETAILS AND SECTIONS
ARCHITECTURAL	
A1.1	SITE PLAN OVERALL
A1.2	ENLARGED SHADE STRUCTURES
A10.2.1	SITE DETAILS
A10.10.1	SPECIALTIES
PLUMBING	
P0.1	PLUMBING LEGEND AND GENERAL NOTES
P1.1	PLUMBING SITE PLAN
METAL SHADE STRUCTURE (PC 04-122375)	
LS1.0	GENERAL INFO
LS1.1	GENERAL INFO
LS3.0	30' WIDE RECTANGULAR HIP FOUNDATION PLAN
LS3.1	30' WIDE RECTANGULAR HIP FRAMING & CONNECTION DETAILS
LS3.4	30' WIDE RECTANGULAR HIP STANDING SEAM ROOFING PLAN
FABRIC SHADE STRUCTURE (PC 04-121917)	
T-1.0	TITLE SHEET
T-2.0	UNIT SELECTION
7.1-1000	PRODUCT INFORMATION
7.2-2000	SPECIFICATIONS
TOTAL SHEET COUNT: 25	

PROJECT DIRECTORY

CLIENT
WASHINGTON UNIFIED SCHOOL DISTRICT

WASHINGTON UNIFIED SCHOOL DISTRICT
930 WESTACRE ROAD
[T] (916) 375-7600
DANIEL BANOWETZ
dbanowetz@wusd.k12.ca.us

ARCHITECT
STUDIO W ARCHITECTS

BRIAN WHITMORE, PRINCIPAL
1930 H STREET
SACRAMENTO, CA 95811
[T] (916) 254-5600
BrianW@StudioW-Architects.com

BRIE GARGANO, ASSOCIATE PRINCIPAL & CLIENT LEADER
1930 H STREET
SACRAMENTO, CA 95811
[T] (916) 254-5603
BrieG@StudioW-Architects.com

CIVIL ENGINEER
WCE

ANTHONY TASSANO
1117 WINFIELD WAY, SUITE 110
[T] (916) 982-1870
Anthony@wceinc.com

STRUCTURAL ENGINEER
MLA STRUCTURAL ENGINEERS

JOHN MANDSAGER
1132 SUNCAST LANE, SUITE 6
EL DORADO HILLS, CA 95762
[T] (916) 941-2425
John@mla-se.com

PLUMBING ENGINEER
SALAS O'BRIEN

ED DAVID
3220 EXECUTIVE RIDGE, SUITE 210
VISTA, CA 92081
[T] (760) 560-0100
Ed.david@salasobrien.com

SPECIFICATION WRITER
BYUN PARTNERS

DAVID BYUN
1205 HAZEL PLACE
COSTA MESA, CA 92626
[T] (310) 800-0353
David@byunpartners.com

PC SHADE STRUCTURE
USA SHADE

ERIK ANSLINGER
927 ENTERPRISE WAY, SUITE A
NAPA, CA 94558
[T] (408) 478-1646
erik.anslinger@usa-shade.com

PC SHADE STRUCTURE
PARK PLANET

KYLE KNOX
415 ELM ST.
RED BLUFF, CA 96080
[T] (541) 315-0001
kyle@parkplanet.com

DSA REQUIREMENTS

1. ALL WORK SHALL CONFORM TO THE 2022 EDITION OF THE TITLE 24, CALIFORNIA CODE OF REGULATIONS (CCR).
2. AS A FACILITY WHICH COMES UNDER THE APPROVAL AND AUTHORITY OF THE DIVISION OF THE STATE ARCHITECT (DSA), THIS PROJECT IS SUBJECT TO DRAWING AND JOB SITE REVIEW BY A REPRESENTATIVE OF DSA.
3. CHANGES TO THE APPROVED DRAWINGS AND SPECIFICATIONS AFFECTING FLS, SSS, AND/OR ACS SHALL BE MADE BY ADDENDA OR A CHANGE ORDER APPROVED BY THE DIVISION OF THE STATE ARCHITECT, AS REQUIRED BY SECTION 4-338, PART 1, TITLE 24, CCR AND DSA IR A-6.
4. A DSA CERTIFIED PROJECT INSPECTOR EMPLOYED BY THE DISTRICT (OWNER) AND APPROVED BY THE DIVISION OF THE STATE ARCHITECT SHALL PROVIDE CONTINUOUS INSPECTION OF THE WORK. THE DUTIES OF THE INSPECTOR ARE DEFINED IN SECTION 4-342, PART 1, TITLE 24, CCR.
5. GRADING PLANS, DRAINAGE IMPROVEMENTS, ROAD AND ACCESS REQUIREMENTS AND ENVIRONMENTAL HEALTH CONSIDERATIONS SHALL COMPLY WITH ALL LOCAL ORDINANCES.
6. A COPY OF PART 1 TO PART 5 OF TITLE 24 SHALL BE KEPT AND BE AVAILABLE IN THE FIELD DURING CONSTRUCTION.
7. DSA SHALL BE NOTIFIED OF THE START OF CONSTRUCTION AND PRIOR TO THE PLACEMENT OF CONCRETE PER SECTION 4-331, PART 1, TITLE 24, CCR
8. THE DIVISION OF THE STATE ARCHITECT IS EXEMPT FROM ARBITRATION OR MEDIATION PROCEDURES.
9. SUPERVISION BY THE DIVISION OF THE STATE ARCHITECT IS PER SECTION 4-334, PART 1, TITLE 24, CCR
10. ADMINISTRATION OF CONSTRUCTION PER PART 1, TITLE 24, CCR:
    - VERIFIED REPORTS PER SECT 4-336; PART 1, TITLE 24 CCR
    - DUTIES OF ARCHITECT PER SECT 4-331, 4-341; PART 1, TITLE 24 CCR
    - DUTIES OF CONTRACTOR PER SECT. 4-343; PART 1, TITLE 24
11. TESTING AND INSPECTION:
    - INSPECTOR APPROVED BY DSA AS PER SECT. 4-333(D); PART 1, TITLE 24, CCR
    - TESTS AND TESTING LABORATORIES PER SECT 4-335
    - SPECIAL INSPECTION PER SECT. 4-333(C)
12. CHANGES IN LEVEL FOR FLOOR FINISHES SHALL CONFORM WITH CBC SECTION 1124B.2 AND 1124B.3.
13. ALL TESTS TO CONFORM TO REQUIREMENTS OF SECTION 4-335; PART 1, TITLE 24, CCR
14. TESTS OF MATERIALS AND TESTING LABORATORY SHALL BE IN ACCORDANCE WITH SECTION 4-335; PART 1, TITLE 24, CCR AND THE DISTRICT SHALL EMPLOY AND PAY THE DSA ACCEPTED LABORATORY. COSTS OF RE-TEST MAY BE BACK CHARGED TO THE CONTRACTOR.
15. INSPECTOR SHALL BE APPROVED BY DSA. INSPECTION SHALL BE IN ACCORDANCE WITH SECTION 4-333(B).
16. THE INTENT OF THESE DRAWINGS AND SPECIFICATIONS IS THAT THE WORK OF THE ALTERATION, REHABILITATION OR RECONSTRUCTION IS TO BE IN ACCORDANCE WITH TITLE 24, CCR. SHOULD ANY EXISTING CONDITIONS SUCH AS DETERIORATION OR NON-COMPLYING CONSTRUCTION BE DISCOVERED WHICH IS NOT COVERED BY THE CONTRACT DOCUMENTS WHEREIN THE FINISHED WORK WILL NOT COMPLY WITH TITLE 24, CCR, A CONSTRUCTION CHANGE DOCUMENT (CCD), OR A SEPARATE SET OF PLANS AND SPECIFICATIONS, DETAILING AND SPECIFYING THE REQUIRED WORK SHALL BE SUBMITTED TO AND APPROVED BY DSA BEFORE PROCEEDING WITH THE WORK. (SECTION 4-317(C), PART 1, TITLE 24, CCR)
17. INSPECTOR OF RECORD REQUIREMENTS:
    A. ONE OR MORE INSPECTORS EMPLOYED BY THE OWNER IN ACCORDANCE WITH THE REQUIREMENTS OF TITLE 24 OF THE CALIFORNIA CODE OF REGULATIONS WILL BE ASSIGNED TO THE WORK. THE INSPECTOR'S DUTIES ARE SPECIFICALLY DEFINED IN SECTION 4-342 OF SAID TITLE 24; PART 1 AND IN ADDITION, SHALL BE STIPULATED IN INTERPRETATION OF REGULATION DOCUMENT IR A-8.
    B. INSPECTOR SHALL BE CERTIFIED AS A CLASS 2 INSPECTOR THROUGH THE DIVISION OF THE STATE ARCHITECT INSPECTOR EXAMINATION PROGRAM. INSPECTOR SHALL ALSO BE SPECIFICALLY APPROVED BY THE DIVISION OF THE STATE ARCHITECT FOR THIS PROJECT AT LEAST 10 DAYS PRIOR TO THE START OF ANY WORK FOR THIS PROJECT.

CODES AND REGULATIONS

APPLICABLE STATE CODES AND REGULATIONS WITH LATEST AMENDMENTS AND SUPPLEMENTS:

1. 2022 BUILDING STANDARDS ADMINISTRATIVE CODE, PART 1, TITLE 24 CCR
2. 2022 CALIFORNIA BUILDING CODE (CBC), PART 2, TITLE 24 CCR (2021 IBC & CALIFORNIA AMENDMENTS)
3. 2022 CALIFORNIA ELECTRICAL CODE (CEC), PART 3, TITLE 24 CCR (2020 NATIONAL ELECTRICAL CODE & CALIFORNIA AMENDMENTS)
4. 2022 CALIFORNIA MECHANICAL CODE (CMC), PART 4, TITLE 24 CCR (2021 UNIFORM MECHANICAL CODE & CALIFORNIA AMENDMENTS)
5. 2022 CALIFORNIA PLUMBING CODE (CPC), PART 5, TITLE 24 CCR (2021 UNIFORM PLUMBING CODE & CALIFORNIA AMENDMENTS)
6. 2022 CALIFORNIA ENERGY CODE, PART 6, TITLE 24 CBSC
7. 2022 CALIFORNIA HISTORICAL BUILDING CODE, PART 8, TITLE 24 CCR
8. 2022 CALIFORNIA FIRE CODE, PART 9, TITLE 24 CCR (2021 INTERNATIONAL FIRE CODE & CALIFORNIA AMENDMENTS)
9. 2022 CALIFORNIA EXISTING BUILDING CODE (CEBC), PART 10, TITLE 24 CCR 2021 INTERNATIONAL EXISTING BUILDING CODE & CALIFORNIA AMENDMENTS)
10. 2022 CALIFORNIA GREEN BUILDING STANDARDS CODE PART 11, TITLE 24
11. 2022 CALIFORNIA REFERENCED STANDARDS, PART 12, TITLE 24 CCR
12. TITLE 8 CCR, CH. 4, SUB-CH. 6 - ELEVATOR SAFETY ORDERS
13. TITLE 19 CCR, PUBLIC SAFETY, SFM REGULATIONS

APPLICABLE FEDERAL CODES AND STANDARDS:

14. AMERICANS WITH DISABILITIES ACT (ADA), TITLE 11
15. UNIFORM FEDERAL ACCESSIBILITY STANDARDS (UFAS) or ADA STANDARDS FOR ACCESSIBLE DESIGN (APPENDIX A OF 28 CFR PART 36)

APPLICABLE REFERENCED STANDARDS:

16. NFPA 13, STANDARD FOR THE INSTALLATION OF SPRINKLER SYSTEMS (CA AMENDED), 2022 EDITION
17. NFPA 24, PRIVATE FIRE MAINS (CA AMENDED), 2019 EDITION
18. NFPA 72, NATIONAL FIRE ALARM CODE (CA AMENDED), 2022 EDITION
19. NFPA 80, FIRE DOOR AND OTHER OPENING PROTECTIVES, 2019 EDITION
20. NFPA 2001, CLEAN AGENT FIRE EXTINGUISHING SYSTEMS, 2018 EDITION

REFERENCE CODE SECTION FOR NFPA STANDARDS - 2022 CBC (SFM) CHAPTER 35. SEE CHAPTER 35 FOR STATE OF CALIFORNIA AMENDMENTS TO NFPA STANDARDS.

PROJECT DESCRIPTION

APN: 046-020-067 AND 046-110-013

THE PROJECT INCLUDES NEW DRINKING FOUNTAINS, NEW FABRIC AND METAL SHADE STRUCTURE.

NOTE THAT DRINKING FOUNTAINS WILL BE INSTALLED DURING THE SCHOOL YEAR, WHILE ALL OTHER WORK WILL BE INSTALLED DURING THE SUMMER OF 2024.

FABRIC SHADE STRUCTURE TO HAVE 340FR FABRIC FOR FLAME RETARDANT, COMPLYING WITH TITLE 19, SECTION 315(a)

DEFERRED APPROVALS

1. NONE

ADD ALTERNATES

1. NONE

STATEMENT OF GENERAL CONFORMANCE

FOR ARCHITECTS/ENGINEERS WHO UTILIZE PLANS, INCLUDING BUT NOT LIMITED TO SHOP DRAWINGS, PREPARED BY OTHER LICENSED DESIGN PROFESSIONALS AND/OR CONSULTANTS

Application No. 02-122281

File No. 57-H5

[X] The drawings or sheets listed on the cover or index sheet (all C, P, and PC drawings)
[ ] This drawing, page of specifications/calculations

have been prepared by other design professionals or consultants who are licensed and/or authorized to prepare such drawings in this state. It has been examined by me for:

1. design intent and appears to meet the appropriate requirements of Title 24, California Code of Regulations and the project specifications prepared by me, and
2. coordination with my plans and specifications and is acceptable for incorporation into the construction of this project.

The Statement of General Conformance "shall not be construed as relieving me of my rights, duties, and responsibilities under Sections 17302 and 81138 of the Education Code and Sections 4-336, 4-341 and 4-344" of Title 24, Part 1. (Title 24, Part 1, Section 4-317 [b])

I find that:
[X] All drawings or sheets listed on the cover or index sheet
[ ] This drawing or page

[X] is/are in general conformance with the project design and
[X] has/have been coordinated with the project plans and specifications

Signature — **Date** 03/14/2024

Architect or Engineer designated to be in general responsible charge.

Brian P. Whitmore
Print Name

C 30345 — **License Number**
09-30-2025 — **Expiration Date**

STATEMENT OF GENERAL CONFORMANCE AND SIGNATURE BLOCK PER IR A-18

VICINITY MAP

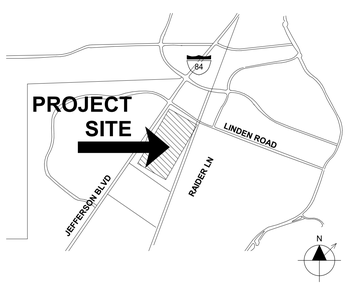

DSA STAMP

IDENTIFICATION STAMP
DIV. OF THE STATE ARCHITECT
APP: 02-122281 INC:
REVIEWED FOR
SS ☑ FLS ☑ ACS ☑
DATE: 03/19/2024

STUDIO W ARCHITECTS

Studio W Architects
1930 H Street
Sacramento, California 95811
[T] 916.254.5600
www.StudioW-Architects.com

ARCHITECT	ENGINEER
LICENSED ARCHITECT BRIAN P. WHITMORE No. C 30345 Exp. 09/30/25 STATE OF CALIFORNIA DATE SIGNED: 03/14/2024	

GENERAL NOTES

1. This sheet is part of a set and is not to be used alone.
2. This sheet is not to be used for construction unless the architect's stamp and signature appear on the drawings and the status box indicated drawings have been released for construction.
3. These plans and prints thereof, as instruments of service, are owned by the architect and are for use on this project only. Reproduction and/or distribution without the prior written consent of the architect is forbidden.
4. Copyright Studio W Associates, Inc. 2023.

REVISION HISTORY

NO.	REMARKS	DATE

DRAWING STATUS — DATE
- ◯ DSA PLAN CHECK
- ◯ DSA BACK CHECK
- ◯ BIDDING
- ◯ CONSTRUCTION

KEY PLAN

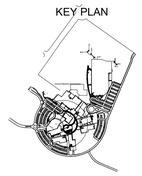

WASHINGTON UNIFIED SCHOOL DISTRICT
930 WESTACRE ROAD
WEST SACRAMENTO, CA 95691

PROJECT STATUS

WUSD RIVER CITY HIGH SCHOOL
ESSR III
1 RAIDER LANE
WEST SACRAMENTO, CA 95691

COVER SHEET

Date	Project Number
03/14/2024	22047
Application Number	**Drawing Number**
02-122281	A0.1
Drawn / Author	Checked / Checker

PRINT DATE: 3/18/2024 1:32:05 PM
FILE PATH: BIM 360://22047 Washington USD River City HS/22047-WUSD River City High School-Site-R21.rvt

DRAWING DISCIPLINE PREFIX

A. ARCHITECTURAL
C. CIVIL
D. INTERIOR DESIGN / FURNITURE
E. ELECTRICAL
FA. FIRE ALARM
FP. FIRE PROTECTION / SPRINKLER SYSTEM
FS. FOOD SERVICE
L. LANDSCAPING
M. MECHANICAL
P. PLUMBING
S. STRUCTURAL
T. TECHNOLOGY

DRAWING INDEX CODE

A0. GENERAL INFORMATION
A1. SITE PLANS
A2. FLOOR PLANS
A3. REFLECTED CEILING PLANS
A4. ROOF PLANS
A5. EXTERIOR ELEVATIONS
A6. BUILDING SECTIONS
A7. ENLARGED PLANS
A8. INTERIOR ELEVATIONS
A9. SCHEDULES
A10. CONSTRUCTION DETAILS

DETAIL DRAWING CODE

A10.8.4

DRAWING NUMBER
DIVISION NUMBER PREFIX
DRAWING INDEX NUMBER

THE DIVISION PREFIX NUMBERS ARE THOSE IDENTIFIED BY THE 48 DIVISION GROUPING SYSTEM OF MASTERFORMAT AS PUBLISHED BY THE CONSTRUCTION SPECIFICATIONS INSTITUTE (CSI) AND SHALL NOT BE SOLELY REPRESENTATIVE OF REQUIREMENTS FOR ANY ONE DIVISION. THOSE DIVISIONS NOTED AS BEING OMITTED ARE NOT APPLICABLE OR ARE INCLUDED UNDER DISCIPLINE DRAWINGS.

IN CASE OF DISCREPANCY BETWEEN THE INDEX AND THE DRAWINGS, THE DRAWINGS SHALL GOVERN.

DIVISION NUMBER CODE

MASTERFORMAT NUMBERS AND TITLES AS PUBLISHED BY THE CONSTRUCTION SPECIFICATIONS INSTITUTE (CSI).

DIVISION 00 PROCUREMENT AND CONTRACTING REQUIREMENTS
DIVISION 01 GENERAL REQUIREMENTS
DIVISION 02 EXISTING CONDITIONS
DIVISION 03 CONCRETE
DIVISION 04 MASONRY
DIVISION 05 METALS
DIVISION 06 WOODS, PLASTICS, AND COMPOSITES
DIVISION 07 THERMAL AND MOISTURE PROTECTION
DIVISION 08 OPENINGS
DIVISION 09 FINISHES
DIVISION 10 SPECIALTIES
DIVISION 11 EQUIPMENT
DIVISION 12 FURNISHINGS
DIVISION 13 SPECIAL CONSTRUCTION
DIVISION 14 CONVEYING EQUIPMENT
DIVISION 21 FIRE SUPPRESSION
DIVISION 22 PLUMBING
DIVISION 23 HEATING, VENTILATING, AND AIR CONDITIONING (HVAC)
DIVISION 25 INTEGRATED AUTOMATION
DIVISION 26 ELECTRICAL
DIVISION 27 COMMUNICATIONS
DIVISION 28 ELECTRONIC SAFETY AND SECURITY
DIVISION 31 EARTHWORK
DIVISION 32 EXTERIOR IMPROVEMENTS
DIVISION 33 UTILITIES
DIVISION 34 TRANSPORTATION
DIVISION 35 WATERWAY AND MARINE CONSTRUCTION
DIVISION 40 PROCESS INTERCONNECTIONS
DIVISION 41 MATERIAL PROCESSING AND HANDLING EQUIPMENT
DIVISION 42 PROCESS HEATING, COOLING, AND DRYING EQUIPMENT
DIVISION 43 PROCESS GAS AND LIQUID HANDLING, PURIFICATION, AND STORAGE EQUIPMENT
DIVISION 44 POLLUTION AND WASTE CONTROL EQUIPMENT
DIVISION 45 INDUSTRY-SPECIFIC MANUFACTURING EQUIPMENT
DIVISION 46 WATER AND WASTEWATER EQUIPMENT
DIVISION 48 ELECTRICAL POWER GENERATION

GENERAL NOTES

1. PRIOR TO SUBMITTING PROPOSAL, BIDDER SHALL EXAMINE CONSTRUCTION DRAWINGS AND SPECIFICATIONS AND SHALL HAVE VISITED THE CONSTRUCTION SITE. HE SHALL BE FAMILIAR WITH THE CONDITIONS UNDER WHICH HE WILL HAVE TO OPERATE AND WHICH WILL IN ANY WAY AFFECT THE WORK UNDER THIS CONTRACT. THE GENERAL CONTRACTOR SHALL NOT DISPUTE, COMPLAIN OR ASSERT THAT THERE IS ANY MISUNDERSTANDING IN REGARDS TO LOCATION, EXTENT, NATURE OR AMOUNT OF WORK TO BE PERFORMED UNDER THIS CONTRACT DUE TO THE CONTRACTOR'S FAILURE TO INSPECT THE SITE. BIDDERS SHALL NOTIFY THE ARCHITECT OF ANY CONDITIONS, REQUIRING WORK, WHICH ARE NOT COVERED IN THE CONTRACT DOCUMENTS.
2. THERE WILL BE NO SUBSTITUTION FOR SPECIFIED ITEMS WITHOUT PRIOR APPROVAL UNLESS OTHERWISE NOTED. REQUESTS FOR SUBSTITUTIONS SHALL BE MADE IN ACCORDANCE WITH GENERAL CONDITIONS & DIVISION 1
3. THE GENERAL BUILDING CONTRACTOR SHALL BE RESPONSIBLE FOR OBTAINING AND PAYING FOR ALL PERMITS REQUIRED BY GOVERNING AGENCIES IN ORDER TO PERFORM THE WORK.
4. THE FINAL LOCATION OF ALL ELECTRICAL AND SIGNAL EQUIPMENT, PANEL BOARDS, FIXTURES, ETC., SHALL BE APPROVED BY OWNER PRIOR TO INSTALLATION.
5. DEFINITIONS
   A. "TYPICAL" MEANS IDENTICAL FOR ALL CONDITIONS, UNLESS OTHERWISE NOTED.
   B. "SIMILAR" MEANS COMPARABLE CHARACTERISTICS FOR THE CONDITION NOTED. VERIFY DIMENSIONS AND ORIENTATIONS.
   C. "PROVIDE" MEANS TO FURNISH AND INSTALL.
   D. "FURNISH" MEANS TO FURNISH AND OTHERS WILL INSTALL.
6. DIMENSIONING RULES:
   A. ALL HORIZONTAL DIMENSIONS SHALL BE TO FACE OF STUD OR TO CENTERLINE OF COLUMN GRID LINE, U.O.N
   B. DIMENSIONS NOTED "CLEAR", "CLR", OR "MINIMUM" MUST BE PRECISELY MAINTAINED.
   C. DIMENSIONS CAN NOT BE MODIFIED WITHOUT APPROVAL OF THE ARCHITECT UNLESS OTHERWISE NOTED.
   D. VERTICAL DIMENSIONS ARE FROM TOP OF FLOOR SLAB UNLESS OTHERWISE NOTED.
   E. DO NOT SCALE DRAWINGS. IF ANY ITEM OF WORK CANNOT BE LOCATED, DO NOT PROCEED WITH THE WORK WITHOUT THE ARCHITECT'S APPROVAL.
   F. DIMENSIONS MARKED "V.I.F." OR "VERIFY" SHALL BE VERIFIED BY THE CONTRACTOR PRIOR TO THE START OF CONSTRUCTION.
   G. VERIFY ALL ROUGH OPENING DIMENSIONS FOR FABRICATED ITEMS WITH THE MANUFACTURER PRIOR TO PROCEEDING WITH CONSTRUCTION.
7. PROVIDE REQUIRED BACKING, BLOCKING, AND BRACING FOR ALL WALL - MOUNTED FIXTURES, ACCESSORIES AND EQUIPMENT.
8. VERIFY AND COORDINATE WALLS THAT MAY REQUIRE NON-TYPICAL THICKNESS OR FRAMING DUE TO ELECTRICAL, MECHANICAL, PLUMBING, STRUCTURAL AND/OR EQUIPMENT REQUIREMENTS.
9. ALL GLAZING SHALL CONFORM TO FEDERAL GLAZING REGULATIONS AND CHAPTER 24, CBC.
10. ALL CONTRACTORS SHALL REMOVE TRASH AND DEBRIS STEMMING FROM THEIR WORK ON A DAILY BASIS. PROJECT SITE SHALL BE MAINTAINED IN A CLEAN AND ORDERLY CONDITION.
11. THE CONTRACTOR SHALL BE RESPONSIBLE FOR REMOVING ALL LEFT-OVER MATERIALS, DEBRIS, TOOLS AND EQUIPMENT INVOLVED IN HIS OPERATIONS AT THE CONCLUSION OF THE INSTALLATION. HE SHALL LEAVE ALL AREAS CLEAN AND FREE FROM DUST.
12. HAZARDOUS MATERIALS: THE ARCHITECT AND THE ARCHITECT'S CONSULTANTS SHALL HAVE NO RESPONSIBILITY FOR THE DISCOVERY, PRESENCE, HANDLING, REMOVAL, DISPOSAL OF OR EXPOSURE OF PERSONS TO ASBESTOS OR HAZARDOUS OR TOXIC SUBSTANCES IN ANY FORM AT THE PROJECT SITE. PROFESSIONAL SERVICES RELATED OR IN ANY WAY CONNECTED WITH THE INVESTIGATION, DETECTION, ABATEMENT, REPLACEMENT, USE, SPECIFICATION, OR REMOVAL OF PRODUCTS, MATERIALS, OR PROCESSES CONTAINING ASBESTOS OR HAZARDOUS OR TOXIC MATERIALS ARE BEYOND THE SCOPE OF THIS AGREEMENT.
13. THE GENERAL CONTRACTOR & SUBCONTRACTORS ARE RESPONSIBLE FOR LOCATING & VERIFYING ALL EXISTING UNDERGROUND UTILITIES IN ALL AREAS OF NEW WORK PRIOR TO COMMENCEMENT OF EXCAVATION. EXISTING UTILITIES SHOWN ON THE DRAWING ARE APPROXIMATE ROUTING LOCATION AS BEST DETERMINED FROM EXISTING DRAWINGS AND THE SCHOOL DISTRICT, BUT SHOULD NOT BE CONSTRUED TO REPRESENT ALL THE EXISTING UNDERGROUND UTILITIES.
14. ALL TEMPORARY WORK SHALL BE CONSIDERED A PART OF THIS CONTRACT AND NO EXTRA CHARGES WILL BE ALLOWED. THIS SHALL INCLUDE MINOR ITEMS OF MATERIAL OR EQUIPMENT NECESSARY TO MEET THE REQUIREMENTS AND INTENT OF THE PROJECT
15. ALL WALL PENETRATIONS TO EXTERIOR WALLS SHALL BE SEALED AIR/WATER TIGHT. ALL INTERIOR PENETRATIONS SHALL BE SEALED TO PROVIDE A PROFESSIONAL AND FINISHED APPEARANCE.
16. THE DRAWINGS AND SPECIFICATIONS DO NOT UNDERTAKE TO SHOW OR LIST EVERY ITEM TO BE PROVIDED, BUT RATHER TO DEFINE THE REQUIREMENTS FOR A FULL AND WORKING SYSTEM FROM THE STANDPOINT OF THE END USER. FOR THIS REASON, WHEN AN ITEM NOT SHOWN OR LISTED IS CLEARLY NECESSARY FOR PROPER USE CONTROL/ OPERATION OF EQUIPMENT WHICH IS SHOWN OR LISTED, PROVIDE ALL ITEMS WHICH WILL ALLOW THE SYSTEM TO FUNCTION PROPERLY AT NO INCREASE IN CONTRACT PRICE OR TIME.
17. THE DETAILS REFLECT THE DESIGN INTENT FOR TYPICAL CONDITIONS. THE CONTRACTOR SHALL VERIFY ALL FIELD CONDITIONS AND SHALL INCLUDE, IN HIS SCOPE. THE COST FOR COMPLETE FINISHED INSTALLATIONS, INCLUDING ANOMALIES, OF ALL TRADES.
18. ALL WORK SHALL CONFORM TO CALIFORNIA CODES, TRADE STANDARDS WHICH GOVERN EACH PHASE OF THE PROJECT, AND ALL APPLICABLE LOCAL CODES AND AUTHORITIES HAVING JURISDICTION.
19. THIS DRAWING SET SHALL BE USED IN CONJUNCTION WITH THE CSI FORMAT PROJECT MANUAL PUBLISHED IN BOOK FORM, COMBINED, THEY ARE THE "CONTRACT DOCUMENTS".
20. NO WORK SHALL COMMENCE WITH UNAPPROVED MATERIALS. ANY WORK DONE WITH UNAPPROVED MATERIALS AND EQUIPMENT IS AT THE CONTRACTOR'S RISK. SEE SPECIFICATIONS FOR SUBMITTAL AND SUBSTITUTION REQUIREMENTS.
21. CONSTRUCTION MATERIAL STORED ON THE SITE SHALL BE PROPERLY STACKED AND PROTECTED TO PREVENT DAMAGE OR DETERIORATION. FAILURE IN THIS REGARD MAY BE CAUSE FOR REJECTION OF MATERIAL AND/OR WORK. SECURITY OF MATERIALS ARE THE SOLE RESPONSIBILITY OF CONTRACTOR.
22. ALL EQUIPMENT/CABINETS SHALL BE FABRICATED FROM FIELD VERIFIED DIMENSIONS AND APPROVED SHOP DRAWINGS. COORDINATE MECHANICAL, PLUMBING AND ELECTRICAL EQUIPMENT WITH THIS WORK.
23. THE CONTRACTOR SHALL BE RESPONSIBLE FOR ALL DAMAGE AND COSTS ATTRIBUTED TO RAIN WATER DAMAGE DURING THE DURATION OF THIS PROJECT.
24. PROTECT AREAS FROM DAMAGE WHICH MAY OCCUR DUE TO TEMPERATURES, WIND, DUST, WATER, ETC. PROVIDE AND MAINTAIN TEMPORARY BARRICADES, CLOSURE WALLS, ETC., AS REQUIRED DURING CONSTRUCTION.
25. MAINTAIN EXISTING PEDESTRIAN ACCESS ALONG EXISTING ADJACENT STREETS.
26. ALL PUBLIC IMPROVEMENTS SHALL BE MADE IN ACCORDANCE WITH THE LATEST ADOPTED CITY/COUNTY STANDARDS.
27. ALL TYPICAL DETAILS SHALL APPLY UNLESS NOTED OTHERWISE.
28. NOTIFY THE ARCHITECT IN WRITING AND SEEK CLARIFICATION IF ANY DISCREPANCIES OR OMISSIONS ARE FOUND. CONTRACTOR SHALL BE RESPONSIBLE FOR REMEDIAL WORK IF RELATED WORK IS CONTINUED AFTER A DISCREPANCY IS IDENTIFIED.
29. NEW FINISHES AND CONSTRUCTION SHALL BE PROTECTED BY THE CONTRACTOR FROM POTENTIAL DAMAGE CAUSED BY CONSTRUCTION ACTIVITY. DAMAGE TO FINISHES OR CONSTRUCTION SHALL BE REPAIRED OR REPLACED (OWNER'S DECISION) BY THE CONTRACTOR WITH IDENTICAL MATERIAL AND/OR FINISHES. CONTRACTOR SHALL MAKE AND MAINTAIN A PHOTOGRAPHIC RECORD NOTEBOOK WITH DATED/INDEXED PHOTOGRAPHS.
30. SEE ELECTRICAL DRAWINGS FOR INFORMATION RELATED TO TELECOMMUNICATION EQUIPMENT, POWER, AND LIGHTING FIXTURES AND EQUIPMENT. SEE ARCHITECTURAL PLANS, REFLECTED CEILING PLAN AND INTERIOR ELEVATIONS FOR COORDINATED EQUIPMENT LOCATIONS. IF NOT SHOWN, CONTACT ARCHITECT FOR REVIEW AND DECISION.
31. PROVIDE ACCESS DOORS REQUIRED FOR ACCESS TO CONCEALED MECHANICAL, PLUMBING, AND ELECTRICAL EQUIPMENT.
32. ALL NOTED WORK IS UNDERSTOOD TO BE NEW, UNLESS LABELED AS "(E)" OR "EXISTING".

SUPPLEMENTAL GENERAL NOTES

1. THESE DRAWINGS DO NOT CONTAIN THE NECESSARY COMPONENTS FOR CONSTRUCTION SAFETY.
2. LOCATIONS OF ALL UTILITIES SHOWN ARE APPROXIMATE AND CONTRACTOR SHALL EXERCISE EXTREME CAUTION IN EXCAVATING AND TRENCHING ON THIS SITE TO AVOID INTERCEPTING EXISTING PIPING OR CONDUITS. IT SHALL BE THE RESPONSIBILITY OF THE CONTRACTOR TO LOCATE ALL EXISTING UTILITIES WHETHER SHOWN HEREIN OR NOT AND TO PROTECT THEM FROM DAMAGE. THE ARCHITECT IS NOT RESPONSIBLE FOR THE LOCATION OF UNDERGROUND UTILITIES OR STRUCTURES WHETHER OR NOT SHOWN OR DETAILED AND INSTALLED BY ANY OTHER CONTRACT. THE CONTRACTOR SHALL IMMEDIATELY NOTIFY THE ARCHITECT SHOULD ANY UNIDENTIFIED CONDITIONS BE DISCOVERED. THE CONTRACTOR SHALL BEAR ALL EXPENSE OF REPAIR OR REPLACEMENT OF UTILITIES OR OTHER PROPERTY DAMAGED BY OPERATIONS IN CONJUNCTION WITH THE EXECUTION OF THIS WORK.
3. THESE DOCUMENTS AND THE IDEAS AND DESIGNS INCORPORATED HEREIN, AS AN INSTRUMENT OF PROFESSIONAL SERVICE, ARE THE PROPERTY OF STUDIO W ARCHITECTS, AND ARE NOT TO BE USED, IN WHOLE OR IN PART, FOR ANY OTHER PROJECT WITHOUT THE WRITTEN AUTHORIZATION OF STUDIO W ARCHITECTS.
4. EACH BIDDER SHALL POSSESS AT THE TIME OF BID, A CLASS B OR THE APPROPRIATE CLASS C CONTRACTOR'S LICENSE PURSUANT TO PUBLIC CONTRACT CODE SECTION 3300 AND BUSINESS AND PROFESSIONS CODE SECTION 7028.15. THE SUCCESSFUL BIDDER MUST MAINTAIN THE LICENSE THROUGHOUT THE DURATION OF THIS CONTRACT.
5. FIRE SAFETY DURING CONSTRUCTION & DEMOLITION:
   A. GENERAL: FIRE SAFETY DURING CONSTRUCTION & DEMOLITION SHALL COMPLY WITH 2022 CALIFORNIA FIRE CODE (CFC) CH. 33 (PART 9, TITLE 24 CCR)
   B. CONSTRUCTION SAFEGUARDS: SHALL COMPLY WITH APPLICABLE PROVISIONS OF CBC 3302.
   C. DEMOLITION: SHALL COMPLY WITH APPLICABLE PROVISIONS OF CBC 3303.
   D. BUILDING ACCESS: ACCESS TO BUILDINGS FOR THE PURPOSE OF FIREFIGHTING SHALL BE PROVIDED. CONSTRUCTION MATERIAL SHALL NOT BLOCK ACCESS TO BUILDINGS, HYDRANTS OR FIRE APPLIANCES PER CBC 3308.1.
   E. MEANS OF EGRESS: SHALL COMPLY WITH APPLICABLE PROVISIONS OF CBC 3310.
   F. WATER SUPPLY: APPROVED WATER SUPPLY SHALL BE MADE AVAILABLE IN ACCORDANCE WITH CBC 3313.
   G. FIRE WATCH: MAINTAIN FIRE WATCH WHEN REQUIRED BY THE BUILDING OFFICIAL AND WHEN EXISTING FIRE PROTECTION SYSTEMS ARE SHUT DOWN FOR ALTERATIONS. FIRE WATCH SHALL REMAIN IN EFFECT UNTIL EXISTING FIRE PROTECTION SYSTEMS ARE RETURNED TO SERVICE OR AS ALLOWED BY THE BUILDING OFFICIAL PER CBC 3314.
6. PENETRATIONS IN FIRE RATED MATERIALS OR ASSEMBLIES SHALL BE RESTORED TO EQUAL RATING. FIRE STOP SYSTEMS AS LISTED BY UNDERWRITERS LABORATORIES SHALL BE INSTALLED PER FIRE RESISTANCE DIRECTORY. FIRE STOP SYSTEMS SHALL BE AS SPECIFIED.
7. NONRESIDENTIAL ENERGY STANDARDS COMPLIANCE STATEMENT (TITLE 24, PART 6):
   A. THE DESIGN INDICATED HEREIN COMPLIES WITH THE REQUIREMENTS OF THE ENERGY CONSERVATION STANDARDS OF TITLE 24, PART 6, CALIFORNIA CODE OF REGULATIONS. THE PROPOSED BUILDINGS WILL BE IN COMPLIANCE WITH THE ENERGY CONSERVATION STANDARDS PROVIDED THEY ARE BUILT ACCORDING TO THESE DRAWINGS AND SPECIFICATIONS AND PROVIDED ANY FUTURE IMPROVEMENTS ARE COMPLETED ACCORDING TO THE REQUIREMENTS OF TITLE 24, PART 6, CALIFORNIA CODE OF REGULATIONS. THESE DRAWINGS AND SPECIFICATIONS HAVE BEEN PREPARED TO INCLUDE ALL SIGNIFICANT ENERGY CONSERVATION FEATURES REQUIRED FOR COMPLIANCE WITH THE STANDARDS. BUILDING AREAS THAT ARE UNCONDITIONED AND/OR NOT SUBJECT TO THE STANDARDS ARE INDICATED ON THE DRAWINGS.
   B. ENVELOPE MANDATORY MEASURES:
      A. INSTALLED INSULATING MATERIALS SHALL HAVE BEEN CERTIFIED BY THE MANUFACTURER TO COMPLY WITH THE CALIFORNIA QUALITY STANDARDS FOR INSULATING MATERIAL.
      B. ALL INSULATING MATERIALS SHALL BE INSTALLED IN COMPLIANCE WITH THE FLAME SPREAD RATING AND SMOKE DENSITY REQUIREMENTS OF TITLE 24, PART 2, CALIFORNIA CODE OF REGULATIONS, SECTIONS 719
      C. ALL EXTERIOR JOINTS AND OPENINGS IN THE BUILDING ENVELOPE THAT ARE POTENTIAL AND OBSERVABLE SOURCES OF AIR LEAKAGE SHALL BE CAULKED, GASKETED, WEATHERSTRIPPED OR OTHERWISE SEALED.
      D. SITE CONSTRUCTED DOORS, WINDOWS, AND SKYLIGHTS SHALL BE CAULKED BETWEEN THE UNIT AND THE BUILDING, AND SHALL BE WEATHERSTRIPPED (EXCEPT FOR UNFRAMED GLASS DOORS AND FIRE DOORS).
      E. MANUFACTURED DOORS AND WINDOWS INSTALLED SHALL HAVE AIR INFILTRATION RATES CERTIFIED BY THE MANUFACTURER IN ACCORDANCE WITH TITLE 24, PART 6, CALIFORNIA CODE OF REGULATIONS, SECTION 116(a)1.
      F. MANUFACTURED FENESTRATION PRODUCTS IN THE ENVELOPE OF THE BUILDING, INCLUDING, BUT NOT LIMITED TO, WINDOWS, SLIDING GLASS DOORS, FRENCH DOORS, SKYLIGHTS, CURTAIN WALLS, AND GARDEN WINDOWS MUST BE LABELED FOR U-VALUE IN ACCORDANCE WITH THE (NFRC) NATIONAL FENESTRATION RATING COUNCIL'S INTERIM U-VALUE RATING PROCEDURE.
      G. DEMISING WALL INSULATION SHALL BE INSTALLED IN ALL OPAQUE PORTIONS OF FRAMED WALLS (EXCEPT DOORS).
8. PROOF LOAD TESTS FOR EXPANSION TYPE ANCHOR BOLTS:
   A. ANCHOR DIAMETER REFERS TO THE THREAD SIZE FOR THE WEDGE CATEGORY AND TO THE ANCHOR OUTSIDE DIAMETER FOR THE SLEEVE CATEGORY.
   B. APPLY PROOF TEST LOADS TO WEDGE & SLEEVE ANCHORS WITHOUT REMOVING THE NUT IF POSSIBLE. IF NOT, REMOVE NUT AND INSTALL A THREADED COUPLER TO THE SAME TIGHTNESS OF THE ORIGINAL NUT USING A TORQUE WRENCH AND APPLY LOAD.
   C. FOR SLEEVE INTERNALLY THREADED CATEGORIES, VERIFY THAT THE ANCHOR IS NOT PREVENTED FROM WITHDRAWING BY A BASEPLATE OR OTHER FIXTURES. IF RESTRAINT IS FOUND, LOOSEN AND SHIM OR REMOVE FIXTURE(S) PRIOR TO TESTING.
   D. REACTION LOADS FROM TEST FIXTURES MAY BE APPLIED CLOSE TO THE ANCHOR BEING TESTED, PROVIDED THE ANCHOR IS NOT RESTRAINED FROM WITHDRAWING BY THE FIXTURE(S).
   E. TEST EQUIPMENT IS TO BE CALIBRATED BY AN APPROVED TESTING LABORATORY IN ACCORDANCE WITH STANDARD RECOGNIZED PROCEDURES.
   F. THE FOLLOWING CRITERIA APPLY FOR THE ACCEPTANCE OF INSTALLED ANCHORS:
      1. HYDRAULIC RAM METHOD: THE ANCHOR SHOULD HAVE NO OBSERVABLE MOVEMENT AT THE APPLICABLE TEST LOAD. FOR WEDGE AND SLEEVE TYPE ANCHORS, A PRACTICAL WAY TO DETERMINE OBSERVABLE MOVEMENT IS THAT THE WASHER UNDER THE NUT BECOMES LOOSE. DROP-IN ANCHORS ARE ONLY TO BE TESTED WITH THIS METHOD.
      2. TORQUE WRENCH METHOD: THE APPLICABLE TEST TORQUE MUST BE REACHED WITHIN THE FOLLOWING LIMITS: WEDGE OR SLEEVE TYPE: ONE-HALF (1/2) TURN OF THE NUT. ONE-QUARTER (1/4) TURN OF THE NUT FOR THE 3/8 IN. SLEEVE ANCHOR ONLY.
   G. TESTING SHOULD OCCUR 24 HOURS MINIMUM AFTER INSTALLATION OF THE SUBJECT ANCHORS.
   H. ALL ANCHOR BOLTS OF THE EXPANSION TYPE (LOADED IN EITHER PULLOUT OR SHEAR) SHALL HAVE 50 PERCENT OF THE BOLTS (ALTERNATE BOLTS IN ANY GROUP ARRANGEMENT ALLOWED BY THE TYPE OF SUBSTRATE AND DIAMETER OF BOLT LISTED BELOW UNDER TEST VALUES TABLE) PROOF TESTED IN TENSION TO TWICE THE ALLOWABLE TENSION LOAD. IF THERE ARE ANY FAILURES, THE IMMEDIATELY ADJACENT BOLTS MUST THEN ALSO BE TESTED. TESTING SHALL BE PERFORMED IN ACCORDANCE WITH TITLE 24, PART 2, SECTION 1910A.5, "TESTS FOR POST-INSTALLED ANCHORS IN CONCRETE."
   I. ALL BOLTS HAVE ICC APPROVAL.
   J. ALL ANCHOR BOLTS OF THE EXPANSION TYPE SHALL BE ONE OF THE FOLLOWING:
      1. HILTI KB-TZ2 ANCHOR ICC NO. ESR 4266

MINIMUM TEST VALUES
NORMAL WEIGHT OR LIGHTWEIGHT CONCRETE

ANCHOR	WEDGE		
DIA. (IN)	TENSION LOAD (LBS)	TORQUE (FT-LBS)	EFFECTIVE MIN. EMBEDMENT
3/8	6,490	30	1 1/2" - 2 1/2"
1/2	11,240	50	1 1/2" - 3 1/4"
5/8	17,535	40	2 3/4" - 4"
3/4	25,335	110	3 1/4" - 4 3/4"

9. POWDER-DRIVEN CONCRETE FASTENERS:
   A. GENERAL: USE OF POWDER DRIVEN CONCRETE FASTENERS FOR TENSION LOADS IS LIMITED TO SUPPORT OF MINOR LOADS LIKE ACOUSTICAL CEILINGS, DUCT WORK, CONDUIT.
   B. ALLOWABLE LOADS: IN GENERAL, LOADS SHOULD BE LIMITED TO LESS THAN 100 POUNDS. HOWEVER GREATER LOADS MAY BE PERMITTED FOR SPECIAL CASES WHEN APPROVED BY THE CHECKING SUPERVISOR OR FIELD ENGINEER.
   C. TESTING: THE OPERATOR, TOOL, AND FASTENER SHALL BE PREQUALIFIED BY THE PROJECT INSPECTOR. HE SHALL OBSERVE THE TESTING OF THE FIRST 10 FASTENER INSTALLATIONS. A TEST "PULL-OUT" LOAD OF NOT LESS THAN TWICE THE DESIGN LOAD, OR 200 POUNDS, WHICHEVER IS GREATER, SHALL BE APPLIED TO THE PIN IN SUCH A MANNER AS NOT TO RESIST THE SPALLING TENDENCY OF THE CONCRETE SURROUNDING THE PIN. THEREAFTER, RANDOM TESTS UNDER THE PROJECT INSPECTOR'S SUPERVISION SHALL BE MADE OF APPROXIMATELY 1 IN 10 PINS, EXCEPT THAT WHEN THE DESIGN LOAD EXCEEDS 100 POUNDS, ONE HALF OF THE PINS SHALL BE TESTED. SHOULD FAILURE OCCUR ON ANY PIN TESTED, ALL INSTALLATIONS MUST BE TESTED AND UNFAIR PINS REPLACED.
   D. ALL POWDER DRIVEN CONCRETE FASTENERS SHALL BE ONE OF THE FOLLOWING: HILTI, INC.
      1. 0.145 DIA. PAF X-CR INTO STEEL BASE MATERIAL - ICC NO. ESR 1663
      2. 0.138 DIA. PAF X-CR INTO CONCRETE BASE MATERIAL - ICC NO. ESR 1663

OWNER FURNISHED ITEMS

- NONE

DSA STAMP

IDENTIFICATION STAMP
DIV. OF THE STATE ARCHITECT
APP: 02-122281 INC:
REVIEWED FOR
SS ☑ FLS ☑ ACS ☑
DATE: 03/19/2024

STUDIO W ARCHITECTS

Studio W Architects
1930 H Street
Sacramento, California 95811
[T] 916.254.5600
www.StudioW-Architects.com

ARCHITECT	ENGINEER

LICENSED ARCHITECT BRIAN P. WHITMORE No. C 30345 Ren. 12/31/25 STATE OF CALIFORNIA
DATE SIGNED: 03/14/2024

GENERAL NOTES

1. This sheet is part of a set and is not to be used alone.
2. This sheet is not to be used for construction unless the architect's stamp and signature appear on the drawings and the status box indicated drawings have been released for construction.
3. These plans and prints thereof, as instruments of service, are owned by the architect and are for use on this project only. Reproduction and/or distribution without the prior written consent of the architect is forbidden.
4. Copyright Studio W Associates, Inc. 2023.

REVISION HISTORY

NO.	REMARKS	DATE

DRAWING STATUS

DATE
- DSA PLAN CHECK
- DSA BACK CHECK
- BIDDING
- CONSTRUCTION

KEY PLAN

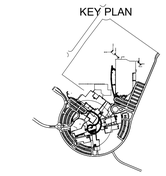

WASHINGTON UNIFIED SCHOOL DISTRICT
930 WESTACRE ROAD
WEST SACRAMENTO, CA 95691

PROJECT STATUS

WUSD RIVER CITY HIGH SCHOOL
ESSR III
1 RAIDER LANE
WEST SACRAMENTO, CA 95691

GENERAL NOTES

Date	Project Number
03/14/2024	22047
Application Number	Drawing Number
02-122281	A0.2
Drawn / Author	Checked / Checker

PRINT DATE: 3/18/2024 12:27:28 PM
FILE PATH: BIM 360://22047 Washington USD River City HS/22047-WUSD River City High School-Site-A21.rvt

ARCHITECTURAL DRAWING ABBREVIATIONS

#	POUND OR NUMBER
&	AND
*	ITEMS IDENTIFIED AS "NIC" ARE NOT PART OF THIS DSA APPROVAL
2X	NOMINAL LUMBER SIZE (4X, 6X, 8X, ETC.)
@	AT
⊥	PERPENDICULAR
A	
A/C	AIR CONDITIONING
A/E	ARCHITECT/ENGINEER
AB	ANCHOR BOLT
ABAN	ABANDON
ABC	AGGREGATE BASE COURSE
ABV	ABOVE
AC	ASPHALTIC CONCRETE
ACC	ACCESS(IBLE)
ACP	ALUMINUM COMPOSITE PANEL
ACST	ACOUSTICAL
ACT	ACOUSTICAL CEILING TILE
AD	AREA DRAIN
ADDM	ADDENDUM
ADH	ADHESIVE
ADJ	ADJUSTABLE
ADJC	ADJACENT
AFF	ABOVE FINISH FLOOR
AFG	ABOVE FINISHED GRADE
AGGR	AGGREGATE
AHU	AIR HANDLING UNIT
ALS	ASSISTED LISTENING SYSTEM
ALT	ALTERNATE
ALUM./AL.	ALUMINUM
ANC	ANCHOR, ANCHORAGE
APLD	APPLIED
APPRX	APPROXIMATELY
ARCH	ARCHITECT(URAL)
ASC	ABOVE SUSPENDED CEILING
ASF	ABOVE STAGE FINISH
ASPH	ASPHALT
ASSY	ASSEMBLY
ASYM	ASYMMETRICAL
AUTO	AUTOMATIC
AV	AUDIO VISUAL
AWG	AMERICAN WIRE GAUGE
B	
B	BOLT
BC	BACK OF CURB
BD	BOARD
BITUM	BITUMINOUS
BLDG	BUILDING
BLK	BLOCK
BLKG	BLOCKING
BLW	BELOW
BLW CLG	BELOW CEILING
BLW FFLR	BELOW FINISH FLOOR
BM	BENCH MARK
BN	BOUNDARY NAILING
BO	BOTTOM OF
BOT	BOTTOM
BRCG	BRACING
BRDG	BRIDGING
BRG	BEARING
BRK	BRICK
BRKT	BRACKET
BRS	BRASS
BRZ	BRONZE
BS	BOTH SIDES
BSMT	BASEMENT
BTWN	BETWEEN
BUR	BUILT UP ROOFING
BW	BOTH WAYS
C	
C&G	CURB AND GUTTER
CAB	CABINET
CAD	CADMIUM
CB	CATCH BASIN
CBB	CEMENTITIOUS BACKER BOARD
CBC	CALIFORNIA BUILDING CODE
CEM	CEMENT
CER	CERAMIC
CFCI	CONTRACTOR FURNISHED CONTRACTOR INSTALLED
CFLG	COUNTERFLASHING
CFOI	CONTRACTOR FURNISHED OWNER INSTALLED
CG	CORNER GUARD
CHBD	CHALKBOARD
CHFR	CHAMFER
CI	CAST IRON
CIP	CAST IN PLACE
CIR	CIRCLE
CIRC	CIRCULAR, CIRCUMFERENCE
CJ	CONSTRUCTION JOINT
CL	CHAIN LINK OR CENTER LINE
CLG	CEILING
CLJ	CONTROL JOINT
CLKG	CAULKING
CLL	CONTRACT LIMIT LINE
CLOS	CLOSURE
CLR	CLEAR(ANCE)
CLRM	CLASSROOM
CMP	CORRUGATED METAL PANEL
CMPST	COMPOSITION
CMU	CONCRETE MASONARY UNIT
CNCL	CONCEALED
CNR	CORNER
CNTR	COUNTER
COL	COLUMN
COM	COMMON
COMB	COMBINATION
COMP	COMPOSITE
COMPT	COMPARTMENT
CONC	CONCRETE
CONF	CONFERENCE
CONN	CONNECTION
CONSTR	CONSTRUCTION
CONT	CONTINUOUS, CONTINUATION
CONTR	CONTRACT(OR)
COORD	COORDINATE
CORR	CORRIDOR
CPR	COPPER
CPRS	COMPRESS(ED), (ION), (IBLE)
CPT	CARPET
CRS	COLD ROLLED STEEL
CS	CAST STONE
CSG	CASING
CSK	COUNTERSUNK
CSMT	CASEMENT
CSWK	CASEWORK
CT	CERAMIC TILE
CTB	CERAMIC TILE BASE
CTF	CERAMIC TILE FLOOR
CTG	COATING
CTR	CENTER
CUFT	CUBIC FOOT
CUIN	CUBIC INCH
CUST	CUSTODIAN
CUYD	CUBIC YARD
CW	CURTAIN WALL
D	
D	DRAIN
d.	PENNYWEIGHT (NAILS)
DA	DOUBLE ACTING
DBL	DOUBLE
DEG	DEGREES
DEMO	DEMOLISH, DEMOLITION
DEP	DEPRESSED
DEPT	DEPARTMENT
DET	DETAIL
DF	DRINKING FOUNTAIN
DG	DECOMPOSED GRANITE
DH	DOUBLE HUNG
DIA	DIAMETER
DIAG	DIAGONAL
DIFF	DIFFUSER
DIM	DIMENSION
DISP	DISPENSER
DIV	DIVISION
DMPF	DAMPPROOFING
DMT	DEMOUNTABLE
DN	DOWN
DR	DOOR
DRB	DRAINBOARD
DRLV	DOOR LOUVER
DS	DOWNSPOUT
DSP	DRY STANDPIPE
DT	DRAIN TILE
DVTL	DOVETAIL
DW	DISHWASHER
DWG	DRAWING
DWL	DOWEL
DWR	DRAWER
E	
(E)	EXISTING
E	EAST
EA	EACH
EAR	EXHAUST AIR REGISTER
EB	EXPANSION BOLT
EE	EACH END
EF	EACH FACE
EFS	EXTERIOR FINISH SYSTEM
EHD	ELECTRIC HAND DRYER
EIFS	EXTERIOR INSULATION AND FINISH SYSTEM
EJ	EXPANSION JOINT
EL	ELEVATION
ELAST	ELASTOMERIC
ELEC	ELECTRIC(AL)
ELEV	ELEVATOR
EM	EXPANDED METAL
EMER	EMERGENCY
EN	EDGE NAILING
ENCL	ENCLOSE(URE)
ENGR	ENGINEER
ENTR	ENTRANCE
EP	ELECTRICAL PANELBOARD
EQ	EQUAL
EQUIP	EQUIPMENT
ESC	ESCUTCHEON
ESCL	ESCALATOR
ESMT	EASEMENT
EW	EACH WAY
EWC	ELECTRIC WATER COOLER
EWH	ELECTRIC WATER HEATER
EWS	EYE WASH STATION
EXC	EXCAVATE
EXH	EXHAUST
EXP	EXPOSED
EXPN	EXPANSION
EXS	EXTRA STRONG
EXT	EXTERIOR
F	
(F)	FUTURE
F/F	FACE TO FACE
FA	FIRE ALARM
FAB	FABRIC
FBD	FIBERBOARD
FBRK	FIRE BRICK
FCBRK	FACE BRICK
FD	FLOOR DRAIN
FDTN	FOUNDATION
FE	FIRE EXTINGUISHER
FEC	FIRE EXTINGUISHER CABINET
FF	FINISH FLOOR
FFA	FROM FLOOR ABOVE
FFB	FROM FLOOR BELOW
FFEL	FINISHED FLOOR ELEVATION
FFL	FINISHED FLOOR LINE
FGL	FIBERGLASS
FHC	FIRE HOUSE CABINET
FHMB	FLAT HEAD MACHINE BOLT
FHMS	FLAT HEAD MACHINE SCREW
FHWS	FLATHEAD WOOD SCREW
FIN	FINISH(ED)
FJT	FLUSH JOINT
FLASH	FLASHING
FLDG	FOLDING
FLG	FLOORING
FLR	FLOOR
FLUOR	FLUORESCENT
FN	FIELD NAILING
FOB	FACE OF BLOCK
FOC	FACE OF CONCRETE/CURB
FOF	FACE OF FINISH
FOG	FACE OF GRID
FOM	FACE OF MASONRY
FOS	FACE OF STUD
FPL	FIREPLACE
FPRF	FIREPROOF(ING)
FR	FRAME(D), (ING)
FRG	FIBERGLASS REINFORCED GYPSUM
FRP	FIBERGLASS REINFORCED PLASTIC
FRTW	FIRE RETARDANT TREATED WOOD
FRZ	FREEZER
FS	FIRE SPRINKLER
FS	FAR SIDE
FSTN	FASTEN, FASTENER
FT	FOOT/FEET
FTG	FOOTING
FURG	FURRED, (ING)
FWC	FABRIC WALL COVERING
G	
GA	GAUGE
GAL	GALLON
GALV	GALVANIZED
GB	GRAB BAR
GFRC	GLASS FIBER REINFORCED CONCRETE
GI	GALVANIZED IRON
GL	GLASS
GLULAM	GLUE LAMINATED
GLZ	GLAZING
GLZCMU	GLAZED CONRETE MASONRY UNIT
GND	GROUND
GPC	GYPSUM PLASTER CEILING
GR	GRADE
GRBM	GRADE BEAM
GRLN	GRADE LINE
GSB	GYPSUM SHEATHING BOARD
GSM	GALVANIZED SHEET METAL
GSS	GALVANIZED STEEL SHEET
GST	GLAZED STRUCTURAL TILE
GT	GROUT
GVL	GRAVEL
GYP	GYPSUM
GYP BD	GYPSUM BOARD
H	
HB	HOSE BIB
HC	HOLLOW CORE
HD	HEAVY DUTY
HDAS	HEADED ANCHOR STUD
HDJT	HEAD JOINT
HDR	HEADER
HDW	HARDWARE
HDWD	HARDWOOD
HEX	HEXAGONAL
HGR	HANGER
HLDN	HOLD DOWN
HM	HOLLOW METAL
HMD	HOLOW METAL DOOR
HMDF	HOLLOW METAL DOOR AND FRAME
HMF	HOLLOW METAL FRAME
HNDRL	HANDRAIL
HORIZ	HORIZONTAL
HPT	HIGH POINT
HR	HOUR
HT	HEIGHT
HTG	HEATING
HVAC	HEATING, VENTILATING, AIR CONDITIONING
HWH	HOT WATER HEATER
I	
ID	INSIDE DIAMETER
IN	INCH
INCL	INCLUDE(D), (ING)
INFO	INFORMATION
INSTL	INSTALL
INSUL	INSULATE(D), (ION)
INT	INTERIOR
INV	INVERT
IPS	IRON PIPE SIZE
ISA	INTERNATIONAL SYMBOL OF ACCESSIBILITY
J	
JAN	JANITOR
JST	JOIST
JT	JOINT
K	
KIT	KITCHEN
KO	KNOCKOUT
KPL	KICKPLATE
L	
LAB	LABORATORY
LAD	LADDER
LAM	LAMINATE
LAV	LAVATORY
LB(S)	POUND(S)
LBL	LABEL
LBR	LUMBER
LDR	LEADER
LF	LINEAL FOOT
LG	LENGTH, LONG
LH	LEFT HAND
LHR	LEFT HAND REVERSE
LKNT	LOCKNUT
LKR	LOCKER
LKWASH	LOCKWASHER
LLH	LONG LEG HORIZONTAL
LLV	LONG LEG VERTICAL
LMST	LIMSTONE
LNSCP	LANDSCAPE(D)
LNTL	LINTEL
LP	LIGHTPROOF
LPT	LOW POINT
LT	LIGHT
LTWT	LIGHTWEIGHT
LV	LOUVER VENT
LVL	LEVEL(ER)
LWC	LIGHTWEIGHT CONCRETE
LWIC	LIGHTWEIGHT INSULATING CONCRETE
M	
MAINT	MAINTAIN(ANCE)
MAS	MASONRY
MATL	MATERIAL
MAX	MAXIMUM
MB	MACHINE BOLT
MBR	MEMBER
MC	MEDICINE CABINET
MCB	METAL CORNER BEAD
MDO	MEDIUM DENSITY OVERLAID
MECH	MECHANICAL
MED	MEDIUM
MEMB	MEMBRANE
MEZZ	MEZZANINE
MFD	METAL FLOOR DECKING
MFR	MANUFACTUR(ER)
MH	MANHOLE
MIN	MINIMUM
MIRR	MIRROR
MISC	MISCELLANEOUS
ML	METAL LATH
MLDG	MOLDING
MLWK	MILLWORK
MO	MASONRY OPENING
MOD	MODULE(AR)
MR	MOISTURE RESISTANT
MRB	MARBLE
MRD	METAL ROOF DECKING
MS	MACHINE SCREW
MTD	MOUNTED
MTL	METAL
MTR	MORTAR
MULL	MULLION
N	
(N)	NEW
N	NORTH
NAT	NATURAL
NCOMBL	NONCOMBUSTIBLE
NE	NOT EXCEEDING
NF	NEAR FACE
NIC	NOT IN CONTRACT
NLB	NON-LOAD BEARING
NM	NONMETALLIC
NO	NUMBER
NOM	NOMINAL
NR	NOISE REDUCTION
NRC	NOISE REDUCTION COEFFICIENT
NRCA	NATIONAL ROOFING CONTRACTOR'S ASSOCIATION
NS	NEAR SIDE
NTS	NOT TO SCALE
O	
O/	OVER
O/O	OUT TO OUT
OA	OVERALL
OBS	OBSCURE
OC	ON CENTER
OCC	OCCUPANTS OR OCCUPANCY
OD	OUTSIDE DIAMETER
OFCI	OWNER FURNISHED CONTRACTOR INSTALLED
OFF	OFFICE
OFOI	OWNER FURNISHED OWNER INSTALLED
OFS	OUTSIDE FACE OF STUD
OHMS	OVALHEAD MACHINE SCREW
OHWS	OVALHEAD WOOD SCREW
OI	OWNER INSTALLED
OPH	OPPOSITE HAND
OPNG	OPENING
OPP	OPPOSITE
OPQ	OPAQUE
OPR	OPERABLE
ORD	OVERFLOW ROOF DRAIN
OSB	ORIENTED STRAND BOARD
OVFL	OVERFLOW
OVHD	OVERHEAD
P	
P	PAINT
PA	PUBLIC ADDRESS
PAR	PARALLEL
PAT	PATTERN
PB	PANIC BAR
PBD	PARTICLE BOARD
PC	PORTLAND CEMENT
PCC	PRECAST CONCRETE
PCP	PORTLAND CEMENT PLASTER
PED	PEDESTAL
PERF	PERFORATED
PERIM	PERIMETER
PERP	PERPENDICULAR
PGBD	PEGBOARD
PH	PHASE
PHS	PHILLIPS HEAD SCREW
PI	POINT OF INTERSECTION
PIV	POST INDICATOR VALVE
PL	PLATE, PROPERTY LINE
PLAM	PLASTIC LAMINATE
PLAS	PLASTER
PLYWD	PLYWOOD
PM	PRESSED METAL
PMF	PRESSED METAL FRAME
PNEU	PNEUMATIC
PNL	PANEL
PNT	PAINT(ED)
POL	POLISHED
POLY	POLYETHYLENE
PORC	PORCELAIN
PORT	PORTABLE
PR	PAIR
PRCST	PRECAST
PREFAB	PREFABRICATED
PREFIN	PREFINISHED
PREFMD	PREFORMED
PRKG	PARKING
PRML	PREMOLDED
PROJ	PROJECT
PROP	PROPERTY
PSCONC	PRESTRESSED CONCRETE
PT	POINT
PTD	PAPER TOWEL DISPENSER
PTDF	PRESSURE TREATED DOUGLAS FIR
PTN	PARTITION
PTR	PAPER TOWEL RECEPTACLE
PVC	POLYVINYL CHLORIDE
PVG	PAVE(D), (ING)
PVMT	PAVEMENT
Q	
QT	QUARRY TILE
QTB	QUARRY TILE BASE
QTF	QUARRY TILE FLOOR
QTR	QUARTER
QTY	QUANTITY
R	
R	RISER
RA	RETURN AIR
RAB	RABBET
RAD	RADIUS
RB	RESILIENT BASE
RBR	RUBBER
RCP	REINFORCED CONCRETE PIPE
RCVR	RECEIVER
RD	ROOF DRAIN
RDWY	ROADWAY
REBAR	REINFORCING STEEL BARS
REC	RECESSED
RECT	RECTANGULAR
RECYL	RECYCLING
REF	REFERENCE
REFL	REFLECT(ED), (IVE), (OR)
REFR	REFRIGERATOR
REG	REGISTER
REINF	REINFORCED
REM	REMOVE(ABLE)
REP	REPAIR
REPL	REPLACE
REQD	REQUIRED
RESIL	RESILIENT
RET	RETURN
REV	REVISION(S), REVISED
RF	RESILIENT FLOORING
RFG	ROOFING
RFH	ROOF HATCH
RGDINS	RIGID INSULATION
RH	RIGHT HAND
RHMS	ROUND HEAD MACHINE SCREW
RHR	RIGHT HAND REVERSE
RHWS	ROUND HEAD WOOD SCREW
RL	ROOF LEADER
RLG	RAILING
RM	ROOM
RND	ROUND
RO	ROUGH OPENING
ROW	RIGHT OF WAY
RR	RESTROOM
RS	ROUGH SAWN
RTF	RUBBER TILE FLOORING
RTU	ROOF TOP UNIT
RV	ROOF VENT
RVL	REVEAL
RVS	REVERSE (SIDE)
RVT	RIVET(ED)
RWD	REDWOOD
RWL	RAIN WATER LEADER
S	
S	SOUTH
S2S	SURFACED TWO SIDES
S4S	SURFACED FOUR SIDES
SA	SUPPLY AIR
SALV	SALVAGE
SAM	SELF-ADHERED MEMBRANE
SAT	SUSPENDED ACOUSTICAL TILE
SB	SPLASH BLOCK
SBSTR	SUBSTRATE
SC	SOLID CORE
SCD	SEAT COVER DISPENSER
SCHED	SCHEDULE
SCP	SCUPPER
SCRN	SCREEN
SD	STORM DRAIN
SDBL	SANDBLAST
SEC	SECONDS
SECT	SECTION
SEP	SEPERATE OR SEPERATION
SF	SQUARE FEET, STOREFRONT
SGL	SINGLE
SHR	SHOWER
SHT	SHEET(ING)
SHTG	SHEATHING
SHV	SHELVES(ING)
SIM	SIMILAR
SK	SINK
SKLT	SKYLIGHT
SLD	SEALED
SLDG	SLIDE(ING)
SLDR	SOLDER
SLNT	SEALANT
SLV	SLEEVE
SM	SHEET METAL
SMACNA	SHEET METAL AND AIR CONDITIONING CONTRACTOR'S NATIONAL ASSOCIATION
SMLS	SEAMLESS
SMS	SHEET METAL SCREW
SND	SANITARY NAPKIN DISPENSER
SNDINS	SOUND INSULATION
SNDU	SANITARY NAPKIN DISPOSAL UNIT
SNT	SEALANT
SP	SPACES
SPC	SUSPENDED PLASTER CEILING
SPD	SOAP DISPENSER
SPEC	SPECIFICATION(S)
SPRT	SUPPORT
SQ	SQUARE
SS	STAINLESS STEEL
SSK	SERVICE SINK
ST	STREET
STA	STATION
STAG	STAGGERED
STC	SOUND TRANSMISSION CLASS
STD	STANDARD
STG	SEATING
STIF	STIFFENER
STIR	STIRRUP
STL	STEEL
STOR	STORAGE
STR	STRAIGHT
STRUC	STRUCTURAL
STU	STRUCT
SUSP	SUSPENDED
SV	SHEET VINYL
SYMM	SYMMETRICAL
SYNTH	SYNTHETIC
SYS	SYSTEM
T	
T	TEMPERED, TOILET, TREAD
T24	TITLE 24
T&B	TOP AND BOTTOM
T&G	TONGUE & GROOVE
TB	THRU BOLT
TBE	THREADED BOTH ENDS
TD	TOWEL DISPENSER
TDR	TOWEL DISPENSER/RECEPTACLE
TEL	TELEPHONE
TEMP	TEMPORARY
TER	TERRAZZO
TFA	TO FLOOR ABOVE
TFB	TO FLOOR BELOW
THD	THREADED(ED)
THERM	THERMAL
THK	THICK
THRES	THRESHOLD
THRU	THROUGH
TKBD	TACKBOARD
TMPD	TEMPERED
TO	TOP OF
TOB	TOP OF BEAM
TOC	TOP OF CURB OR TOP OF CONCRETE
TOF	TOP OF FOOTING
TOFF	TOP OF FINISH FLOOR
TOJ	TOP OF JOIST
TOL	TOLERANCE
TOM	TOP OF MASONRY
TOP	TOP OF PARAPET
TOPV	TOP OF PAVEMENT
TOS	TOP OF SHEATHING
TOSL	TOP OF SLAB
TOST	TOP OF STEEL
TOW	TOP OF WALL OR TOP OF WALK
TPD	TOILET PAPER DISPENSER
TPTN	TOILET PARTITION
TRANS	TRANSITION
TS	TUBE STEEL
TV	TELEVISION
TWLB	TOWEL BAR
TYP	TYPICAL
U	
UC	UNDERCUT
UGND	UNDERGROUND
UL	UNDERWRITER'S LABORATORY
UNFIN	UNFINISHED
UON	UNLESS OTHERWISE NOTED
UR	URINAL
URM	UNREINFORCED MASONRY
UTIL	UTILITY
V	
VAR	VARIES
VB	VINYL BASE
VCT	VINYL COMPOSITION TITLE
VER	VERIFY
VERT	VERTICAL
VEST	VESTIBULE
VF	VINYL FABRIC
VFAT	VINYL FACED ACOUSTIC TILE
VIF	VERIFY IN FIELD
VJ	V-JOINT(ED)
VNR	VENEER
VR	VAPOR RETARDER
VTR	VENT THROUGH ROOF
VWC	VINYL WALL COVERING
W	
W	WEST
W.O.	WHERE OCCURS
W/	WITH
W/O	WITHOUT
W/W	WALL TO WALL
WBL	WOOD BLOCKING
WC	WATER CLOSET
WD	WOOD
WDP	WOOD PANELING
WDW	WINDOW
WF	WIDE FLANGE
WFS	WOOD FURRING STRIP
WGL	WIRED GLASS
WH	WATER HEATER
WH	WALL HUNG
WI	WROUGHT IRON
WID	WIDTH, WIDE
WLD	WELD(ED)
WM	WIRE MESH
WP	WATERPROOF(ING)
WPT	WORKING POINT
WR	WIRE ROPE
WS	WOOD SCREW
WSCT	WAINSCOT
WT	WEIGHT
WWF	WELDED WIRE FABRIC
X	
XBRACE	CROSS BRACE
XFMR	TRANSFORMER
XSECT	CROSS SECTION
Y	
YCO	YARD CLEANOUT
YD	YARD

SYMBOLS LEGEND

N = PLAN NORTH ARROW
ADDITIONAL ARROW INDICATES TRUE NORTH

X = BUILDING SECTION NUMBER
AX.X = SHEET NUMBER

X = WALL SECTION NUMBER
AX.X = SHEET NUMBER

X = EXTERIOR ELEVATION NUMBER
AX.X = SHEET NUMBER

X = INTERIOR ELEVATION NUMBER
AX.X = SHEET NUMBER
N,S,E,W = INDICATES CARDINAL DIRECTION

GRID LINE, FACE OF STRUCTURE

GRID LINE, CENTER OF STRUCTURE

ELEVATION OR DATUM POINT

WP — WORK POINT

REFERENCE DETAIL
X = DETAIL DRAWING NUMBER
AX.X = SHEET NUMBER

20 / AX.X — MATCH LINE AND AREA DESIGNATOR
SHADED PORTION IS THE SIDE CONSIDERED

ROOM NAME
A119 — ROOM NAME
AREA IDENTIFICATION:
A = BUILDING OR AREA DESIGNATION
1 = FLOOR NUMBER
19 = ROOM NUMBER

WINDOW, STOREFRONT, OR CURTAINWALL
SEE WINDOW SCHEDULE

A101A — DOOR NUMBER, SEE DOOR SCHEDULE

08 211 — KEYNOTE
08 = SPECIFICATION DIVISIONAL PREFIX
2 = SPECIFICATION SUBSECTION PREFIX
11 = NOTE NUMBER

1 — REVISION

102 (36" x 24" x 24" LOCKABLE) — CASEWORK TAG
102 = ARCHITECTURAL WOODWORK STANDARD (AWS) NUMBER
36" x 24" x 24" = WIDTH x HEIGHT x DEPTH
LOCKABLE = MODIFYING NOTE

NOTE: FOR BASE CABINETS, HEIGHT DOES NOT INCLUDE COUNTERTOP THICKNESS - REFER TO PLANS FOR COUNTERTOP TYPE

41 — PATH OF EGRESS
41 = OCCUPANT LOAD
STARTING POINT OF PATH OF TRAVEL TO EXIT
MARKED BY DOT AT THE BEGINNING OF EGRESS LINE

P — PANIC HARDWARE DEVICE - REFERENCE DOOR SCHEDULE AND HARDWARE GROUP

S1 — SIGNAGE TAG

MATERIALS LEGEND

EARTH
POROUS FILL (STONE, GRAVEL, ETC.)
CONCRETE
GROUT
STEEL
FINISHED WOOD
TERRAZZO
WOOD BLOCKING
WOOD FRAMING
BATT INSULATION
RIGID INSULATION
GYPSUM BOARD
PLYWOOD
METAL LATH AND PLASTER

DSA STAMP

IDENTIFICATION STAMP
DIV. OF THE STATE ARCHITECT
APP: 02-122281 INC:
REVIEWED FOR
SS ☑ FLS ☑ ACS ☑
DATE: 03/19/2024

STUDIO W ARCHITECTS

Studio W Architects
1930 H Street
Sacramento, California 95811
[T] 916.254.5600
www.StudioW-Architects.com

ARCHITECT	ENGINEER
LICENSED ARCHITECT BRIAN P WHITMORE No. C 30345 Rev. 07/30/25 STATE OF CALIFORNIA DATE SIGNED: 03/14/2024	

GENERAL NOTES

1. This sheet is part of a set and is not to be used alone.
2. This sheet is not to be used for construction unless the architect's stamp and signature appear on the drawings and the status box indicated drawings have been released for construction.
3. These plans and prints thereof, as instruments of service, are owned by the architect and are for use on this project only. Reproduction and/or distribution without the prior written consent of the architect is forbidden.
4. Copyright Studio W Associates, Inc. 2023.

REVISION HISTORY

NO.	REMARKS	DATE

DRAWING STATUS — DATE

- DSA PLAN CHECK
- DSA BACK CHECK
- BIDDING
- CONSTRUCTION

KEY PLAN

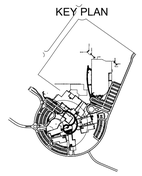

WASHINGTON UNIFIED SCHOOL DISTRICT
930 WESTACRE ROAD
WEST SACRAMENTO, CA 95691

PROJECT STATUS

WUSD RIVER CITY HIGH SCHOOL
ESSR III
1 RAIDER LANE
WEST SACRAMENTO, CA 95691

ARCHITECTURAL SYMBOLS AND ABBREVIATIONS

Date 03/14/2024	Project Number 22047
Application Number 02-122281	Drawing Number A0.3
Drawn / Checked	
Author / Checker	

PRINT DATE: 3/18/2024 12:27:31 PM
FILE PATH: BIM 360:/22047 Washington USD River City HS/22047-WUSD River City High School-Site-R21.rvt

GENERAL NOTES

EXISTING CONDITIONS
1. ALL (E) STRUCTURES AND ITEMS ON SITE ARE APPROXIMATE BASED ON DRAWINGS FROM OWNER.

BUILDING
1. ALL EXTERIOR OUTWARD SWINGING DOORS TO HAVE A MINIMUM 5'-0" LEVEL LANDING.
2. ALL BUILDING ENTRANCES AND EXTERIOR GROUND LEVEL EXITS SHALL BE ACCESSIBLE.

ACCESSIBLE PATH OF TRAVEL
1. SEE ACCESSIBLE PATH OF TRAVEL DEFINITION, THIS SHEET.
2. ALL SIDEWALKS ALONG THE ACCESSIBLE ROUTE TO BE A MINIMUM OF 4'-0" WIDE, AND THERE SHALL BE NO DROP-OFFS OVER 4" AT EDGE OF WALK OR LANDING. WHERE A 4" DROP-OFF DOES OCCUR, PROVIDING A 6" HIGH WARNING CURB OR GUARD OR HANDRAIL. (SEE CBC SECTION 11B-303.5)
3. FOR GRATINGS LOCATED IN THE SURFACE OF ANY PEDESTRIAN WALKWAY IN THE PATH OF TRAVEL, GRID/OPENINGS IN GRATINGS SHALL BE LIMITED TO 1/2" MAXIMUM IN THE DIRECTION OF TRAFFIC FLOW.
4. 36" WIDE CONTINUOUS DETECTABLE WARNING SHALL BE USED WHERE THE PEDESTRIAN PATH CROSSES OR ADJOINS A VEHICULAR WAY (SUCH AS A DRIVEWAY) TO WARN OF POTENTIAL HAZARDS AS PER CBC 11B-705.
5. SEE DESIGN PROFESSIONAL IN GENERAL RESPONSIBLE CHARGE STATEMENT ON THIS SHEET FOR PATH OF TRAVEL REQUIREMENTS.

GATES
1. GATES ALONG ACCESSIBLE ROUTE SHALL MEET DOOR REQUIREMENTS PER CBC SECTION 11B-404 INCLUDING PANIC HARDWARE AND 10" MIN. SMOOTH BOTTOM OR KICK PLATE.
2. GATES IN PATH OF TRAVEL SHALL COMPLY WITH EXIT DOOR REQUIREMENTS WITH PROPER ACCESSIBLE LEVER HARDWARE AND KICK PLATES.

ACC. PATH OF TRAVEL

ACCESSIBLE PATH OF TRAVEL AS INDICATED ON PLANS IS A BARRIER FREE ACCESS ROUTE WITHOUT ANY ABRUPT LEVEL CHANGES EXCEEDING 1/2" IF BEVELED AT 1:2 MAXIMUM SLOPE OR VERTICAL LEVEL CHANGES NOT EXCEEDING 1/4" MAXIMUM AND AT LEAST 48" IN WIDTH. SURFACE IS STABLE, FIRM AND SLIP RESISTANT. CROSS SLOPE DOES NOT EXCEED 2% AND SLOPE IN THE DIRECTION OF TRAVEL IS LESS THAN 5% UNLESS OTHERWISE INDICATED. ACCESSIBLE PATH OF TRAVEL SHALL BE MAINTAINED FREE OF OVERHANGING OBSTRUCTIONS TO 80" MINIMUM AND PROTRUDING OBJECTS GREATER THAN 4" PROJECTION FROM WALL ABOVE 27" AND LESS THAN 80". ARCHITECT SHALL VERIFY THAT THERE ARE NO BARRIERS IN THE PATH OF TRAVEL.

DESIGN PROFESSIONAL IN GENERAL RESPONSIBLE CHARGE STATEMENT

(BASED ON DSA PROCEDURE PR 15-01)

THE P.O.T. IDENTIFIED IN THESE CONSTRUCTION DOCUMENTS MEETS THE REQUIREMENTS OF THE CURRENT APPLICABLE CALIFORNIA BUILDING CODE (CBC) ACCESSIBILITY PROVISIONS FOR PATH OF TRAVEL REQUIREMENTS FOR ALTERATIONS, ADDITIONS AND STRUCTURAL REPAIRS. AS PART OF THE DESIGN OF THIS PROJECT, THE P.O.T. WAS EXAMINED AND ANY ELEMENTS, COMPONENTS OR PORTIONS OF THE P.O.T. THAT WERE DETERMINED TO BE NONCOMPLIANT WITH THE CBC HAVE BEEN IDENTIFIED AND THE CORRECTIVE WORK NECESSARY TO BRING THEM INTO COMPLIANCE HAS BEEN INCLUDED WITHIN THE SCOPE OF THIS PROJECTS WORK THROUGH DETAILS, DRAWINGS AND SPECIFICATIONS INCORPORATED INTO THESE CONSTRUCTION DOCUMENTS. ANY NONCOMPLIANT ELEMENTS, COMPONENTS OR PORTIONS OF THE P.O.T. THAT WILL NOT BE CORRECTED BY THIS PROJECT BASED ON VALUATION THRESHOLD LIMITATIONS OR A FINDING OF UNREASONABLE HARDSHIP ARE INDICATED IN THESE CONSTRUCTION DOCUMENTS.

DURING CONSTRUCTION, IF P.O.T. ITEMS WITHIN THE SCOPE OF THE PROJECT REPRESENTED AS CBC COMPLIANT ARE FOUND TO BE NONCONFORMING BEYOND REASONABLE CONSTRUCTION TOLERANCES, THE ITEMS SHALL BE BROUGHT INTO COMPLIANCE WITH THE CBC AS A PART OF THIS PROJECT BY MEANS OF A CONSTRUCTION CHANGE DOCUMENT.

KEYNOTES

NUMBER	NOTE
02 115	(E) TOW AWAY SIGN
33 101	(E) FIRE HYDRANT

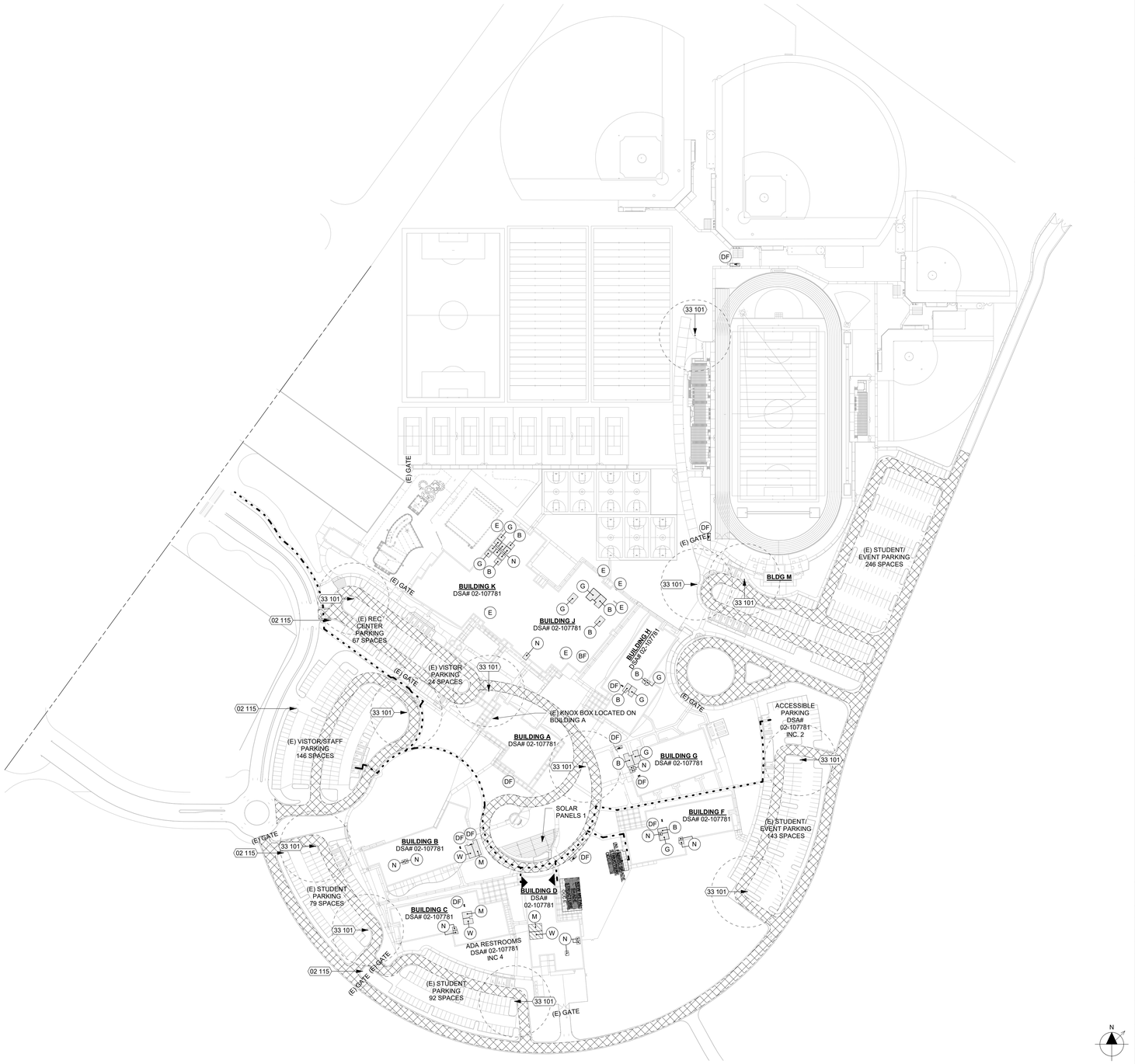

CODE ANALYSIS SITE PLAN 1" = 100'-0" 15

LOCAL FIRE AUTHORITY REVIEW

DSA 810

FIRE & LIFE SAFETY SITE CONDITIONS SUBMITTAL

Division of the State Architect (DSA) documents referenced within this publication are available on the DSA Forms or DSA Publications webpages.

To facilitate the Division of the State Architect's (DSA) fire and life safety plan review of project site conditions, DSA requires the design professional to provide the following information at time of project submittal for projects consisting of construction of a new campus, construction of new building(s), additions to existing buildings, and for site alternate design means for fire department emergency vehicle access, and fire suppression water supply.

Information associated with compliance items 1 through 3 below is to be provided for all project types indicated above. Information associated with items 4 through 7 is to be completed when an alternate means is utilized. Acknowledgement by the school district and signature from the Local Fire Authority (LFA) is only required when an alternate design means is being requested.

The Project Information and Fire & Life Safety Information sections are to be completed for all projects and imaged onto the fire access site plan. When an alternate design/means is proposed, all sections on pages 1 and 2 are to be completed and imaged on the fire access site plan.

For additional information refer to the instructions at the end of this form and DSA Policy *PL 09-01: Fire Flow for Buildings*.

PROJECT INFORMATION	
School District/Owner:	Washington Unified School District.
Project Name/School:	River City High School
Project Address:	1 Raider Lane, West Sacramento, CA 95691

FIRE & LIFE SAFETY INFORMATION				
1.	Has a fire hydrant flow test been performed within the past 12 months? *(If yes, provide a copy of the test data.)*	Yes ☑		No ☐
2.	Was the fire hydrant water flow test performed as part of this LFA review?	Yes ☐		No ☑
3.	Is the project located within a designated fire hazard severity zone (FHSZ) as established by Cal-Fire? *(If yes, indicate FHSZ classification below.)*	Yes ☐		No ☑
	Refer to the following website for FHSZ locations: http://egis.fire.ca.gov/FHSZ/	Moderate ☐	High ☐	Very High ☐
	Wildland Interface Area (WIFA) *(If any designations are checked, project design must meet the requirements of CBC Chapter 7A.)*			WIFA ☐

DGS DSA 810 (revised 12/29/20) DIVISION OF THE STATE ARCHITECT DEPARTMENT OF GENERAL SERVICES Page 1 of 4 STATE OF CALIFORNIA

DSA 810
FIRE & LIFE SAFETY SITE CONDITIONS SUBMITTAL

	CONDITION MEANS AND METHODS RESOLUTION	ALTERNATE ACCEPTED			
		Yes	No	N/A	N/R
4.	Emergency vehicle access roadways do not meet CFC requirements.			✔	
4a.	**Acceptable Alternate:** Emergency vehicle and personnel access as proposed by the project architect is acceptable for providing fire suppression and protection of life and property.				
5.	**Fire Hydrants:** Number and spacing does not meet CFC requirements.			✔	
5a.	**Acceptable Alternate:** Number of fire hydrants and spacing as proposed by the project architect is acceptable for fire suppression and protection of life and property.				
6.	**Fire Hydrants:** Water flow and pressure are less than CFC minimum.			✔	
6a.	**Acceptable Alternate:** The available flow and pressure is acceptable for providing fire suppression and protection of life and property.				
7.	Location of fire department connection(s) serving fire sprinkler systems or standpipe systems does not meet CFC requirements.			✔	
7a.	**Acceptable Alternate:** The location of fire department connection serving the fire sprinkler system and/or standpipe system is acceptable for providing fire suppression and protection of life and property.				

School District Acceptance of Acceptable Design Alternates

By signing this form, the school district acknowledges and accepts the proposed design as an alternative to California Building Code (CBC) and California Fire Code (CFC) minimum requirements, as indicated by one or more of the conditions indicated at items 4a, 5a, 6a or 7a, for providing fire and life safety protection of life and property.

Accepted by: _____ Title: _____

Signature: _____ Date: _____

LOCAL FIRE AUTHORITY (LFA) INFORMATION			
LFA Agency Name:	West Sacramento Fire Department		
LFA Review Official:	Bryan Jonson		
Title:	Fire Marshal	Work Phone:	(916) 617-4608
Work Email:	bryanj@cityofwestsacramento.org		

LFA Reviewer's Signature: _____ Digitally signed by Bryan Jonson Date: 2024.02.22 09:51:42 -08'00' Date: 02/22/24

DGS DSA 810 (revised 12/29/20) DIVISION OF THE STATE ARCHITECT DEPARTMENT OF GENERAL SERVICES Page 2 of 4 STATE OF CALIFORNIA

CODE ANALYSIS

BUILDING NAME	METAL SHADE STRUCTURE	FABRIC SHADE STRUCTURE
BUILDING CONDITION	NEW	NEW
OCCUPANCY (CBC SECTION 302)	A-3	A-3
BUILDING HEIGHT	15'-0"	15'-0"
NUMBER OF STORIES	1	1
TYPE OF CONSTRUCTION	II-B	V-B
SPRINKLERS	NO (CAMPUS IS SPRINKLERED)	NO (CAMPUS IS SPRINKLERED)
SHADE STRUCTURE SQUARE FOOTAGE	1,920 SF	1,200 SF

LOCATION: PER DSA IR 31-1, SECTION 5.1:
"SHADE STRUCTURES (SS) PROPSED FOR LOCATION WITHIN THE FRONTAGE AREA OF A NEW OR EXISTING BUILDING DO NOT INCREASE THE FLOOR AREA OF THAT BUILDING. WHEN LOCATED WITHIN THE FRONTAGE AREA OF A BUILDING WHERE THE FRONTAGE HAS BEEN USED FOR AN AREA FACTOR INCREASE, THE SS SHALL NOT EXCEED 1/3 OF THE PROJECTED HORIZONTAL AREA OF THE FRONTAGE AREA WHERE LOCATED."

FIRE SPRINKLERS: ALTHOUGH EXISTING SCHOOL/BUILDING IS FULLY SPRINKERED, PER DSA IR 31-1 SECTION 6, AN "AUTOMATIC FIRE SPRINKLER SYSTEM IS NOT REQUIRED FOR FREE-STANDING SHADE STRUCTURES..."THEREFORE, NO SPRINKLERS HAVE BEEN ADDED TO NEW SHADE STRUCTURES.

FIRE ALARM: PER DSA IR 31-1, " OCCUPANTS OF SHADES STRUCTURE SHALL BE CAPABLE OF HEARING THE CAMPUS FIRE ALARM SIGNAL". REFER TO SITE PLAN FOR LOCATION OF FIRE ALARM NOTIFICATION APPLIANCES ADJACENT TO SHADE STRUCTURE.

REFER TO ENLARGED PLAN FOR ADDITIONAL INFORMATION ON SHADE TYPE OF CONSTRUCTION, OCCUPANCY TYPE, AND EGRESS.

ACCESSIBLE PARKING

BASED ON CBC TABLE 11B-208.2 "PARKING SPACES"

STUDENT/EVENT PARKING:
STANDARD PARKING PROVIDED: 236 STALLS
ACCESSIBLE PARKING PROVIDED: 10 STALLS + X VAN STALLS
TOTAL PARKING PROVIDED: 246 STALLS

STUDENT/EVENT PARKING:
STANDARD PARKING PROVIDED: 138 STALLS
ACCESSIBLE PARKING PROVIDED: 4 STALLS + 1 VAN STALLS
TOTAL PARKING PROVIDED: 143 STALLS

STUDENT PARKING:
STANDARD PARKING PROVIDED: 88 STALLS
ACCESSIBLE PARKING PROVIDED: 3 STALLS + 1 VAN STALLS
TOTAL PARKING PROVIDED: 92 STALLS

STUDENT PARKING:
STANDARD PARKING PROVIDED: 74 STALLS
ACCESSIBLE PARKING PROVIDED: 4 STALLS + 1 VAN STALLS
TOTAL PARKING PROVIDED: 79 STALLS

VISITOR/STAFF PARKING:
STANDARD PARKING PROVIDED: 141 STALLS
ACCESSIBLE PARKING PROVIDED: 4 STALLS + 1 VAN STALLS
TOTAL PARKING PROVIDED: 146 STALLS

VISITOR PARKING:
STANDARD PARKING PROVIDED: 22 STALLS
ACCESSIBLE PARKING PROVIDED: 1 STALLS + 1 VAN STALLS
TOTAL PARKING PROVIDED: 24 STALLS

REC. CENTER PARKING:
STANDARD PARKING PROVIDED: 62 STALLS
ACCESSIBLE PARKING PROVIDED: 4 STALLS + 1 VAN STALLS
TOTAL PARKING PROVIDED: 67 STALLS

DSA APPLICATION 02-107781

BUILDING DSA APPLICATIONS

BUILDING ID	DSA APPLICATION NUMBER(S)
BUILDING A	02-107781
BUILDING B	02-107781
BUILDING C	02-107781
BUILDING D	02-107781
BUILDING E	02-107781
BUILDING F	02-107781
BUILDING G	02-107781
BUILDING H	02-107781
BUILDING J	02-107781
BUILDING K	02-107781
BUILDING M	02-107781
SOLAR PANELS 1	02-107781

LEGEND

- (E) BUILDING, NOT UNDER SCOPE OF WORK
- SHADE STRUCTURE UNDER SCOPE OF WORK
- (E) 20'-0" WIDE MINIMUM CLEAR FIRE ACCESS LANE
- ACCESSIBLE BATHROOM FACILITIES:
  - W WOMENS, M MENS
  - G GIRLS, B BOYS
  - S ALL GENDER STAFF (SINGLE OCCUPANCY)
  - N ALL GENDER STUDENT (SINGLE OCCUPANCY)
  - DF DRINKING FOUNTAIN
  - BF BOTTLE FILLER ONLY
- EXISTING BATHROOM FACILITIES:
  - W WOMENS, M MENS
  - G GIRLS, B BOYS
  - S ALL GENDER STAFF (SINGLE OCCUPANCY)
  - N ALL GENDER STUDENT (SINGLE OCCUPANCY)
  - E DRINKING FOUNTAIN
- ACCESSIBLE PATH OF TRAVEL, SEE DEFINITION ON THIS SHEET
- PROPERTY LINE
- FIRE HYDRANT AND 75' RADIUS CIRCLE
- LOCATION OF ACCESSIBLE EXTERIOR EXIT DOORS, ENTRANCES, AND EGRESS

DSA STAMP

IDENTIFICATION STAMP
DIV. OF THE STATE ARCHITECT
APP: 02-122281 INC:
REVIEWED FOR
SS ☑ FLS ☑ ACS ☑
DATE: 03/19/2024

STUDIO W ARCHITECTS

Studio W Architects
1930 H Street
Sacramento, California 95811
[T] 916.254.5600
www.StudioW-Architects.com

ARCHITECT	ENGINEER
LICENSED ARCHITECT BRYAN P. WHITMORE No. C 34345 Ren. 9/30/25 STATE OF CALIFORNIA DATE SIGNED: 03/14/2024	

GENERAL NOTES
1. This sheet is part of a set and is not to be used alone.
2. This sheet is not to be used for construction unless the architect's stamp and signature appear on the drawings and the status box indicated drawings have been released for construction.
3. These plans and prints thereof, as instruments of service, are owned by the architect and are for use on this project only. Reproduction and/or distribution without the prior written consent of the architect is forbidden.
4. Copyright Studio W Associates, Inc. 2023.

REVISION HISTORY

NO.	REMARKS	DATE

DRAWING STATUS

	DATE
◯ DSA PLAN CHECK	
◯ DSA BACK CHECK	
◯ BIDDING	
◯ CONSTRUCTION	

KEY PLAN

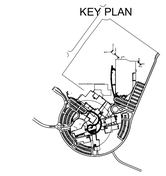

WASHINGTON UNIFIED SCHOOL DISTRICT
930 WESTACRE ROAD
WEST SACRAMENTO, CA 95691

PROJECT STATUS

WUSD RIVER CITY HIGH SCHOOL
ESSR III
1 RAIDER LANE
WEST SACRAMENTO, CA 95691

CODE ANALYSIS SITE PLAN

Date	Project Number
03/14/2024	22047
Application Number	Drawing Number
02-122281	A0.5
Drawn / Author	Checked / Checker

PRINT DATE: 3/18/2024 1:48:09 PM
FILE PATH: BIM 360://22047 Washington USD River City HS/22047-WUSD River City High School-Site-A21.rvt

CIVIL ABBREVIATIONS AND LEGEND

ABBREVIATIONS

NOTE: NOT ALL ABBREVIATIONS MAY BE USED ON THESE PLANS.

AB	AGGREGATE BASE
AC	ASPHALTIC CONCRETE
AD	AREA DRAIN
APN	ASSESSOR'S PARCEL NUMBER
ARV	AIR RELEASE VALVE
ASB	AGGREGATE SUB-BASE
BO	BLOW-OFF VALVE
BV	BUTTERFLY VALVE
BW	BACK OF WALK
C/L	CENTERLINE
CB	CATCH BASIN
CL	CLASS
CMP	CORRUGATED METAL PIPE
CATV	CABLE TELEVISION
CO	CLEANOUT
COMM	COMMUNICATION
CONC.	CONCRETE
CONST.	CONSTRUCT
CR	CURB RETURN
CS	CONCRETE SURFACE
DC	DOUBLE CHECK VALVE
DDC	DOUBLE DETECTOR CHECK VALVE
DG	DECOMPOSED GRANITE
DI	DROP INLET
DIA	DIAMETER
DIP	DUCTILE IRON PIPE
DWG	DRAWING
DS	DOWNSPOUT
E	ELECTRIC
EP	EDGE OF PAVEMENT
ESMT	EASEMENT
EX	EXISTING
FS	FIRE SERVICE LINE
FDC	FIRE DEPARTMENT CONNECTION
FL	FLOWLINE
FM	SANITARY SEWER FORCE MAIN
FF	FINISHED FLOOR ELEVATION
FH	FIRE HYDRANT
G	GAS
GR	GRATE ELEVATION
GRD	GRADE ELEVATION
GV	GATE VALVE
HB	HOSE BIBB
HBD	HEADER BOARD
HDPE	HIGH DENSITY POLYETHYLENE PIPE
HP	HIGH POINT
INV	PIPE INVERT ELEVATION
JP	JOINT UTILITY POLE
LF	LINEAL FEET
LIP	LIP OF GUTTER
LT	LEFT
MS	MOWSTRIP
NTS	NOT TO SCALE
OH	OVERHEAD
PCC	PORTLAND CEMENT CONCRETE
PD	PLANTER DRAIN
PIV	POST INDICATOR VALVE
P/L	PROPERTY LINE
PP	POWER POLE
PUE	PUBLIC UTILITY EASEMENT
PVC	POLYVINYL CHLORIDE
RCP	REINFORCED CONCRETE PIPE
R	RADIUS
RIM	MANHOLE RIM ELEVATION (SOLID COVER)
RP	REDUCED PRESSURE BACKFLOW PREVENTER
RW	RIGHT OF WAY
SCH	SCHEDULE
SD	STORM DRAIN
SDMH	STORM DRAIN MANHOLE
SG	SUBGRADE ELEVATION
SS	SANITARY SEWER
SSMH	SANITARY SEWER MANHOLE
STD	STANDARD
S/W	SIDEWALK
T	TELEPHONE
TC	TOP OF CURB
TD	TRENCH DRAIN
TDCB	TRENCH DRAIN CATCH BASIN
TP	TELEPHONE POLE
TR	TOP OF RAMP ELEVATION
TRW	TOP OF RETAINING WALL
TSW	TOP OF SEAT WALL
TW	TOP OF WALK ELEVATION
U	UTILITY
UG	UNDERGROUND
UON	UNLESS OTHERWISE NOTED
VCP	VITRIFIED CLAY PIPE
W	WATER
W/	WITH
W/O	WITHOUT
WV	WATER VALVE

LEGEND

NOTE: NOT ALL SYMBOLS MAY BE USED ON THESE PLANS.

PROPOSED GRADING & DRAINAGE SYMBOLS:

8" SD	STORM DRAIN LINE (SIZE AND FLOW SHOWN)
	STORM DRAIN MANHOLE (SDMH)
	CATCH BASIN (CB)
	DROP INLET (DI)
	AREA DRAIN (AD)
	PLANTER DRAIN (PD) OR FLOOR DRAIN (FD)
CO	STORM DRAIN CLEANOUT
99.99	ELEVATION
FF=100.00	FINISHED FLOOR ELEVATION
PAD=99.33	BUILDING PAD ELEVATION
	CONCRETE SIDEWALK
	GRADED DIRECTION FOR DRAINAGE FLOW
	SWALE
	SLOPE
	TREE TO BE REMOVED
	RETAINING WALL

PROPOSED SANITARY SEWER SYMBOLS:

6" SS	SANITARY SEWER LINE (SIZE AND FLOW SHOWN)
	SANITARY SEWER MANHOLE (SSMH)
CO	SEWER CLEANOUT FLUSHER BRANCH

PROPOSED WATER SYMBOLS:

8" W	WATER LINE & SIZE
8" FS	FIRE LINE & SIZE
8" DW	DOMESTIC WATER LINE & SIZE
8" RW	RECLAIMED WATER LINE & SIZE
8" IRR	IRRIGATION SERVICE LINE & SIZE
8" NP	NON POTABLE WATER LINE & SIZE
8" SP	FIRE SPRINKLER SERVICE LINE & SIZE
	GATE VALVE
M	WATER METER
FH	FIRE HYDRANT ASSEMBLY
FDC	FIRE DEPARTMENT CONNECTION
DC	DETECTOR CHECK VALVE
DDC	DOUBLE DETECTOR CHECK VALVE
RP	REDUCED PRESSURE BACKFLOW PREVENTER
	BUTTERFLY VALVE
1"	AIR RELEASE VALVE + SIZE
1"	BLOW-OFF VALVE + SIZE
PIV	POST INDICATOR VALVE

DEMOLITION GENERAL NOTES

1. REFER TO ARCHITECTURAL, LANDSCAPE, ELECTRICAL AND PLUMBING PLANS FOR ADDITIONAL DEMOLITION ITEMS.
2. IN THE EVENT THAT ANY UNUSUAL CONDITIONS NOT COVERED BY THE GEOTECHNICAL INVESTIGATION REPORT OR ARE ENCOUNTERED DURING GRADING OPERATIONS THE GEOTECHNICAL ENGINEER AND THE ARCHITECT SHALL BE IMMEDIATELY NOTIFIED FOR DIRECTIONS.
3. ADDITIONAL DEMOLITION INFORMATION MAY BE SHOWN ON THE GRADING, DRAINAGE, AND UTILITY PLANS, AND THOSE PLANS PREPARED BY OTHER DISCIPLINES FOR THIS PROJECT.
4. ALL DEMOLISHED ITEMS SHALL BE DISPOSED OF OFFSITE AT A SUITABLE, LEGAL, DUMP SITE OR OTHER FACILITY.
5. ALL DISPOSED OF MATERIALS SHALL BE RECYCLED IF POSSIBLE.
6. THE SCHOOL DISTRICT SHALL HAVE SALVAGE RIGHTS TO ANY DEMOLISHED ITEMS SHOWN HEREON. THE CONTRACTOR SHALL GIVE THE DISTRICT NOTICE 7 DAYS PRIOR TO THE START OF DEMOLITION. THE DISTRICT SHALL MOVE ANY RETAINED ITEMS OUT OF THE CONTRACTORS WORK AREA, UNLESS ANOTHER ARRANGEMENT IS MADE WITH THE CONTRACTOR. ANY REMAINING ITEMS BECOME THE PROPERTY OF THE CONTRACTOR AND SHALL BE REMOVED FROM THE SITE. ANY ITEMS NOT SHOWN FOR REMOVAL SHALL REMAIN AND SHALL BE PROTECTED FROM DAMAGE DURING CONSTRUCTION TO A REASONABLE EXTENT.
7. EXISTING UTILITY STRUCTURES IN AREAS OF NEW PAVING SHALL BE REMOVED AND REPLACED WITH NEW BOX/COVER AT NEW GRADE UNLESS SPECIFICALLY NOTED OTHERWISE.
8. ITEMS OUTSIDE THE LIMITS OF DEMOLITION SHALL REMAIN AND BE PROTECTED FROM DAMAGE DURING CONSTRUCTION.
9. EXISTING UTILITY STRUCTURES AND PIPING NOT SHOWN ON DEMOLITION PLAN TO BE REMOVED SHALL REMAIN AND BE PROTECTED.
10. SAWCUTS AND SUBSEQUENT PATCH BACK OF CONCRETE WALKS, SHALL BE TO THE EXISTING CONCRETE JOINT BEYOND THE NEAREST LOCATION OF DEMOLITION AS SHOWN. A REASONABLE EFFORT HAS BEEN MADE TO LOCATE, SHOW AND COORDINATE WITH EXISTING JOINTS, HOWEVER IF FIELD CONDITIONS ARE OTHERWISE, IT IS UNDERSTOOD TO REMOVE AND PATCH BACK TO THE NEAREST JOINTS BEYOND DEMOLITION.
11. PRIOR TO THE START OF CONSTRUCTION, VERIFY AND POTHOLE ALL UTILITY POINTS OF CONNECTION FOR LOCATION, DEPTH, AND SIZE. IF CONFLICT IS FOUND, CONTACT THE ENGINEER IMMEDIATELY FOR DIRECTION.
12. WITHIN LANDSCAPE AREAS TO BE DEMOLISHED THERE MAY BE EXISTING IRRIGATION LINES NOT SHOWN ON THIS PLAN. CONTRACTOR SHALL REMOVE LATERAL LINES AND HEADS ENCOUNTERED. MAIN LINES AND CONTROL WIRES MAY ONLY BE REMOVED PROVIDED THAT ROUTING IS KNOWN AND REMOVAL WILL NOT DEACTIVATE AN IRRIGATION SYSTEMS INTENDED TO REMAIN. IF CONFLICT IS FOUND, CONTACT THE ENGINEER FOR DIRECTION.
13. COORDINATE REMOVAL OF LANDSCAPE ITEMS WITH LANDSCAPE PLANS.

GENERAL NOTES

811 Know what's below. Call before you dig.

1. THE TYPES, LOCATIONS, SIZES, AND/OR DEPTHS OF EXISTING UNDERGROUND UTILITIES AS SHOWN ON THESE PLANS WERE OBTAINED FROM SOURCES OF VARYING RELIABILITY. THE CONTRACTOR IS CAUTIONED THAT ONLY ACTUAL EXCAVATION WILL REVEAL THE TYPES, EXTENT, SIZES, LOCATIONS AND DEPTHS OF SUCH UNDERGROUND UTILITIES. A REASONABLE EFFORT HAS BEEN MADE TO LOCATE AND DELINEATE ALL KNOWN UNDERGROUND UTILITIES. HOWEVER, WARREN CONSULTING ENGINEERS CAN ASSUME NO RESPONSIBILITY FOR THE COMPLETENESS OR ACCURACY OF ITS DELINEATION OF SUCH UNDERGROUND UTILITIES, NOR FOR THE EXISTENCE OF OTHER BURIED OBJECTS OR UTILITIES WHICH MAY BE ENCOUNTERED BUT WHICH ARE NOT SHOWN ON THESE PLANS. THE CONTRACTOR OR ANY SUBCONTRACTOR FOR THIS CONTRACT SHALL NOTIFY MEMBERS OF UNDERGROUND SERVICE ALERT (USA) TWO (2) WORKING DAYS IN ADVANCE OF PERFORMING ANY EXCAVATION WORK BY CALLING TOLL FREE 1-800-227-2600, OR 811.
2. WARREN CONSULTING ENGINEERS, INC. (WCE) ASSUMES NO RESPONSIBILITY FOR ERRORS IN PHYSICAL LOCATION OF IMPROVEMENTS, HORIZONTAL OR VERTICAL. IN ADDITION, ANY SUCH ERRORS IN PHYSICAL LOCATION MAY AFFECT THE INTENDED DESIGN OF SUCH IMPROVEMENTS AND WCE CANNOT BE HELD RESPONSIBLE FOR SUCH CONDITIONS WHICH ARE A RESULT OF ERRORS IN SURVEYING, OR IMPROPER CONSTRUCTION.
3. IF SUBSURFACE CULTURAL RESOURCES, REMAINS, AND/OR ARTIFACTS ARE UNCOVERED DURING PROJECT CONSTRUCTION, ALL WORK IN THE VICINITY SHALL BE STOPPED UNTIL SUCH ITEMS CAN BE ASSESSED BY AN APPROPRIATE MEMBER OF THE COUNTY ENVIRONMENTAL IMPACT SECTION STAFF.
4. CONTRACTOR AGREES THAT HE/SHE SHALL ASSUME SOLE AND COMPLETE RESPONSIBILITY FOR JOB SITE CONDITIONS DURING THE COURSE OF CONSTRUCTION OF THIS PROJECT, INCLUDING SAFETY OF ALL PERSONS AND PROPERTY; THAT THIS REQUIREMENT SHALL APPLY CONTINUOUSLY AND SHALL NOT BE LIMITED TO NORMAL WORKING HOURS: AND THAT THE CONTRACTOR SHALL DEFEND, INDEMNIFY AND HOLD THE OWNER AND ENGINEER HARMLESS FROM ANY AND ALL LIABILITY, REAL OR ALLEGED, IN CONNECTION WITH THE PERFORMANCE OF WORK ON THIS PROJECT, EXCEPTING FOR LIABILITY ARISING FROM THE SOLE NEGLIGENCE OF THE OWNER OR ENGINEER.
5. THE CONTRACTOR SHALL OBTAIN AN EXCAVATION PERMIT FROM THE STATE OF CALIFORNIA DEPARTMENT OF INDUSTRIAL SAFETY FOR ALL EXCAVATIONS OF 5 FEET OR MORE IN DEPTH.
6. IT SHALL BE THE CONTRACTOR'S RESPONSIBILITY TO MAKE NECESSARY PRE-CONSTRUCTION SITE REVIEWS TO DETERMINE NECESSARY MEANS AND METHODS TO COMPLETE THE IMPROVEMENTS SHOWN ON THESE PLANS.
7. WHERE IMPROVEMENTS LIE WITHIN AN EXISTING DEVELOPED AREA, CONTRACTOR SHALL USE CAUTION WHEN ACCESSING THE SITE THROUGH THESE EXISTING IMPROVEMENTS. IT IS THE CONTRACTORS RESPONSIBILITY TO PROTECT ANY SUCH EXISTING IMPROVEMENTS OUTSIDE THE PROJECT BOUNDARY, OR EXISTING IMPROVEMENTS WITHIN THE BOUNDARY WHICH ARE TO REMAIN. PROPER PRECAUTIONS SHALL BE PROVIDED AND MAINTAINED THROUGHOUT CONSTRUCTION. ANY DAMAGE SHALL BE REPAIRED OR REPLACED TO THE SATISFACTION OF THE OWNER.
8. IT IS THE RESPONSIBILITY OF THE CONTRACTOR TO KEEP DETAILED RECORDS OF MINOR CHANGES OR ADJUSTMENTS MADE DURING CONSTRUCTION (WHICH WERE NOT FORMALLY ISSUED). UPON PROJECT COMPLETION, THESE RECORDS AND/OR INFORMATION SHALL BE PROVIDED TO THE OWNER AND WARREN CONSULTING ENGINEERS, INC. UNLESS AN OFFICIAL "AS-BUILT" SET OF PLANS IS A REQUIREMENT OF THE CONTRACT. IF AS-BUILT PLANS ARE A REQUIREMENT OF THE CONTRACT, REFER TO SPECIFICATIONS FOR AS-BUILT DELIVERABLE REQUIREMENTS.
9. IN VEHICULAR PATHWAYS, EXISTING ASPHALTIC AND/OR CONCRETE SURFACES SHALL BE CUT TO A NEAT AND STRAIGHT LINE, PARALLEL OR PERPENDICULAR TO THE VEHICULAR TRAVELED PATH. THIS IS TYPICALLY THE ROADWAY CENTERLINE, BUT MAY VARY. THAT SAWCUT EDGE SHALL BE PROTECTED FROM DAMAGE DURING CONSTRUCTION SO A CLEAN EDGE REMAINS FOR PATCH BACK... IF EDGE IS DAMAGED, A NEW SAW CUT WILL BE REQUIRED. THE EXPOSED EDGE SHALL BE "TACKED" WITH EMULSION PRIOR TO PAVING.
10. NO BURNING OR BLASTING SHALL BE ALLOWED ONSITE UNLESS SPECIFICALLY ADDRESSED ON PLANS, OR SPECIFICALLY APPROVED AND COORDINATED WITH THE ARCHITECT, ENGINEER, AND LOCAL AGENCY OR OTHER ADMINISTRATIVE AUTHORITY.
11. SUBGRADE AND RESULTING FINISHED GRADE SHALL BE CONSTRUCTED SMOOTH AND UNIFORM BETWEEN SPOT ELEVATIONS, CONTOURS OR OTHER STRUCTURE ELEVATIONS SHOWN ON GRADING OR OTHER PLANS. NO MOUNDS, RUTS, DEPRESSIONS OR OTHER GRADING DEFICIENCIES WILL BE ALLOWED UNLESS SPECIFICALLY SHOWN ON PLANS.
12. ON NEW WATER SYSTEMS, SERVICE LATERALS SHALL BE MADE USING APPROPRIATE "TEE" AND "WYE" FITTINGS. SADDLE TAPS WILL ONLY BE ALLOWED WHEN MAKING CONNECTIONS TO EXISTING WATER MAINS.
13. CURING COMPOUND SHALL BE APPLIED IN A CONTINUOUS SOLID WET FLOWING COAT. ANY "SPOTTY" APPLICATIONS SHALL BE RECOATED IMMEDIATELY. APPLICATION SHALL BE INSPECTED BY PROJECT INSPECTOR DURING APPLICATION.
14. EMBEDMENT OF FEATURES IN CONCRETE PAVING, CURBS, OR WALLS, SUCH AS SQUARE OR ROUND TUBING, POSTS, OR COLUMNS, STEEL BOLTED PLATES, OR OTHER STRUCTURES, SHALL REQUIRE ADDITIONAL SCORE OR EXPANSION JOINTS TO PREVENT UNCONTROLLED CRACKING. THOSE ADDITIONAL JOINTS MAY OR MAY NOT BE SPECIFICALLY SHOWN ON PLANS BUT SHALL BE PROVIDED BY THE CONTRACTOR.
15. EMBEDMENT OF FEATURES IN CONCRETE PAVING, CURBS, OR WALLS, SUCH AS SQUARE OR ROUND TUBING, POSTS, OR COLUMNS, STEEL BOLTED PLATES, OR OTHER STRUCTURES, SHALL REQUIRE A MINOR ADJUSTMENT OF REBAR WITHIN CONCRETE TO ALLOW FOR SUCH STRUCTURE. THAT REBAR ADJUSTMENT MAY NOT BE SPECIFICALLY SHOWN ON PLANS.
16. NO MORE THAN 1 GALLON OF WATER PER YARD OF CONCRETE CAN BE ADDED TO THE TRUCK AFTER ARRIVAL TO PROJECT SITE. THE ADDITION OF WATER CAN ONLY BE ADDED UNDER THE SUPERVISION OF THE CONCRETE INSPECTOR OR LABORATORY TECHNICIAN.
17. WHEN PUMPING CONCRETE FOR PLACEMENT, ABSOLUTELY NO WATER IS TO BE ADDED TO PUMP HOPPER. ANY WATER ADDED TO HOPPER WILL BE REASON FOR CONCRETE REJECTION AT THE CONTRACTORS EXPENSE.
18. ALL CONTRACTION/CONSTRUCTION JOINTS "CJ" SHALL BE 1/4 THE SLAB THICKNESS DEEP, BUT NO LESS THAN 1" FOR CONTROLLING OF CRACKING. CONTRACTOR SHALL EXERCISE CAUTION WHEN FINAL TROWELING OF CONCRETE SO AS NOT TO FILL IN THESE JOINTS WITH CONCRETE CREAM. ANY CRACKS OUTSIDE OF JOINTS WHICH WERE CONSTRUCTED LESS THAN 1" DEEP, SHALL BE CAUSE FOR CONCRETE SLAB(S) TO BE REMOVED AND REPLACE AT CONTRACTORS EXPENSE.
19. ANY SCREED BOARDS SET WITHIN CONCRETE SLABS SHALL BE AN "OVERHEAD SCREED" SO THERE IS NO INTERFERENCE WITH THE PLACEMENT AND ALIGNMENT OF SLAB REINFORCING.
20. 3-1/2" FELT JOINTS WILL NOT BE ACCEPTED. PROVIDE A FULL 4" FELT JOINT FOR 4" SLAB CONSTRUCTION, AND A 6" FELT JOINT FOR A 6" SLAB SLAB CONSTRUCTION.
21. SHOULD ANY SHRINKAGE CRACKS OCCUR OUTSIDE OF EITHER THE EXPANSION JOINTS OR CRACK CONTROL JOINTS, THEN THE CONCRETE SLAB SHALL BE SAWCUT AT THE NEAREST JOINTS ON EACH SIDE OF THE CRACK AND THE CONCRETE SECTION SHALL BE, REMOVED AND REPLACED. NEW CONCRETE SHALL BE DOWELED INTO EXISTING CONCRETE PER DRAWING DETAIL.
22. ALL AREAS DISTURBED BY GRADING OPERATIONS WHETHER SHOWN ON THE DRAWINGS OR NOT SHALL BE HYDROSEEDED UNLESS OTHERWISE NOTED. HYDRO SEEDING SHALL CONFORM TO LOCAL CITY/COUNTY STANDARDS.
23. REPAIR OR PATCHING OF GALVANIZED METALS, SUCH AS AFTER WELDING GALVANIZED COMPONENTS, SHALL BE MADE USING A ZINC COMPOSITION "HOT STICK" APPLICATION PER ASTM A 780-01. GALVANIZING PAINTS WILL NOT BE ALLOWED.
24. AT LIMITS OF NEW PAVEMENT OR CURBS ADJACENT TO LANDSCAPING PROVIDE A 4:1 MINIMUM TRANSITION TO EXISTING GRADE WITH TOPSOIL. ADJUST EXISTING IRRIGATION HEADS TO FINISH GRADE AND PROVIDE SOD IN GRASS AREAS TO RESTORE TO EXISTING CONDITION.
25. WITHIN LIMITS OF WORK THERE MAY BE EXISTING IRRIGATION LINES NOT SHOWN ON THIS PLAN. CONTRACTOR SHALL REMOVE LATERAL LINES AND HEADS ENCOUNTERED. MAIN LINES AND CONTROL WIRES MAY ONLY BE REMOVED PROVIDED THAT ROUTING IS KNOWN AND REMOVAL WILL NOT DEACTIVATE AN IRRIGATION SYSTEMS INTENDED TO REMAIN. IF CONFLICT IS FOUND, CONTACT THE ARCHITECT FOR DIRECTION.
26. GENERAL CONTRACTOR IS REQUIRED TO HIRE A LANDSCAPE SUBCONTRACTOR TO PERFORM ALL LANDSCAPE AND IRRIGATION REPAIRS.
27. ALL TRANSITIONS TO EXISTING PAVEMENT SHAL BE A SMOOTH AND LEVEL TRANSITION.
28. WIDTH OF NEW SIDEWALKS SHALL MATCH WIDTH OF EXISTING, ADJACENT, SIDEWALKS.
29. SEE ARCHITECTURAL PLANS FOR EXPANSION AND CONTROL JOINT LAYOUT.
30. ADJUST TO FINISH GRADE ALL UTILITY BOXES, FRAMES, COVERS SLEEVES, POST HOLES GRATES, ETC. FOUND IN AREA OF WORK, WHETHER SHOWN OR NOT. CLEAN OR REPLACE AS NECESSARY TO ENSURE PROPER SEATING.
31. FOR ACCESSIBLE PATH OF TRAVEL REQUIREMENTS SEE ARCHITECTURAL SHEETS.
32. PERCENT OF SLOPE SHOWN ON ARROWS ARE MAXIMUM SLOPES AND NOT INTENDED TO SUPERCEDE SLOPES DEFINED BY SPOT ELEVATIONS. 0.0% MAX.
33. WITHIN THE LIMITS OF ACCESSIBLE PARKING AREA AND ACCESSIBLE DROP OFF ZONE THE SLOPE OF PAVEMENT SHALL NOT EXCEED 1.8% IN ANY DIRECTION.
34. TRANSITIONS BETWEEN CONCRETE AND OR ASPHALT SURFACES SHALL BE FLUSH, UNLESS NOTED OTHERWISE BY CURB OR STEP.
35. TRANSITION BETWEEN PAVED SURFACES AND LANDSCAPE AREAS SHALL BE NO GREATER THAN 1", UNLESS NOTED OTHERWISE.
36. THE MINIMUM SLOPE AWAY FROM THE BUILDING ON PAVED SURFACES SHALL BE 1%.

CIVIL SHEET INDEX

C0.0 CIVIL GENERAL NOTES AND ABBREVIATIONS
C0.1 TOPOGRAPHIC SURVEY
C1.1 DEMOLITION PLAN
C2.1 GRADING AND PAVING PLAN
C3.1 UTILITY PLAN
C4.1 DETAILS AND SECTIONS

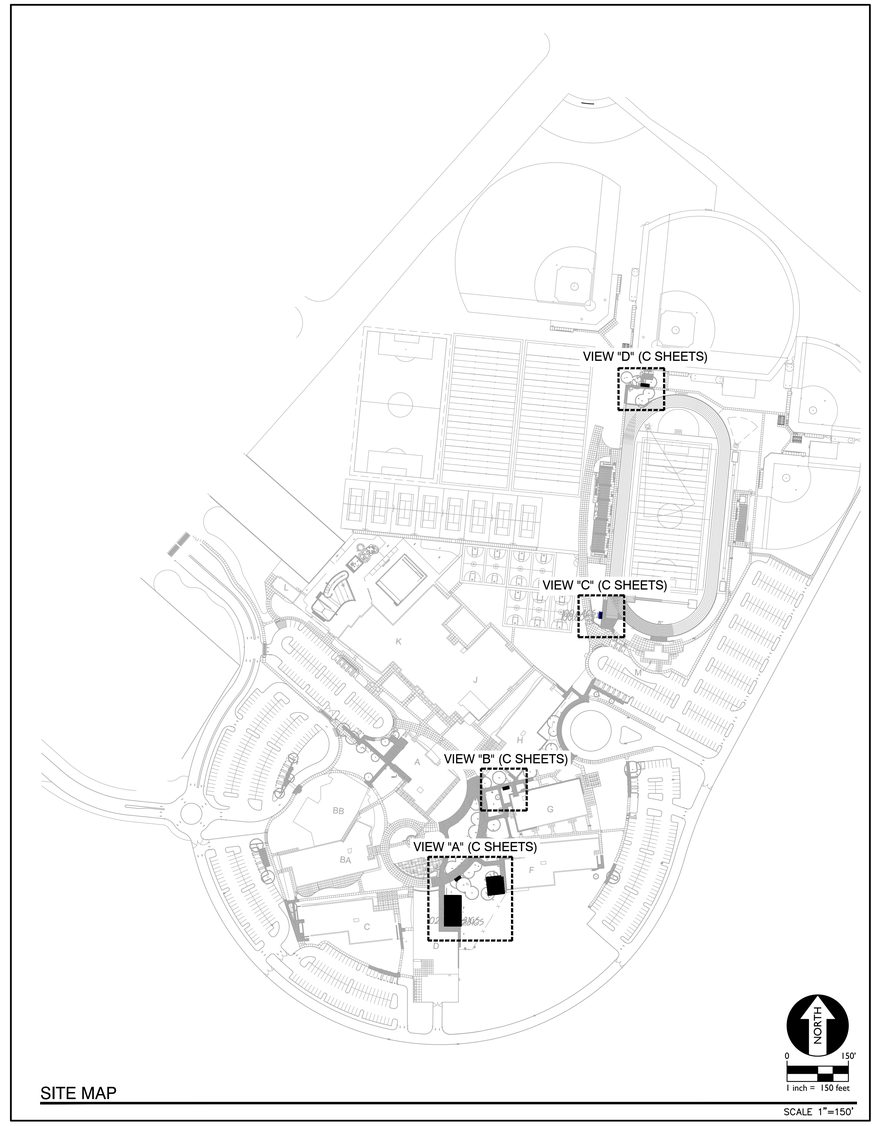

SITE MAP

SCALE 1"=150'

DSA STAMP

IDENTIFICATION STAMP
DIV. OF THE STATE ARCHITECT
APP: 02-122281 INC:
REVIEWED FOR
SS ☑ FLS ☑ ACS ☑
DATE: 03/19/2024

STUDIO W ARCHITECTS

Studio W Architects
1930 H Street
Sacramento, California 95811
[T] 916.254.5600
www.StudioW-Architects.com

ARCHITECT	ENGINEER
LICENSED ARCHITECT BRIAN P. WHITMORE No. C 30345 Ren. 9/30/25 STATE OF CALIFORNIA	REGISTERED PROFESSIONAL ENGINEER ANTHONY J. TASSANO NO. C74695 STATE OF CALIFORNIA

GENERAL NOTES

1. This sheet is part of a set and is not to be used alone.
2. This sheet is not to be used for construction unless the architect's stamp and signature appear on the drawings and the status box indicated drawings have been released for construction.
3. These plans and prints thereof, as instruments of service, are owned by the architect and are for use on this project only. Reproduction and/or distribution without the prior written consent of the architect is forbidden.
4. Copyright Studio W Associates, Inc. 2022.

REVISION HISTORY

NO.	REMARKS	DATE

DRAWING STATUS — DATE

- ○ DSA PLAN CHECK
- ○ DSA BACK CHECK
- ○ BIDDING
- ○ CONSTRUCTION

WASHINGTON UNIFIED SCHOOL DISTRICT
930 WESTACRE ROAD
WEST SACRAMENTO, CA 95691

CONSTRUCTION DOCUMENTS

WUSD RIVER CITY HIGH SCHOOL
ESSR III
1 RAIDER LANE
WEST SACRAMENTO, CA 95691

CIVIL GENERAL NOTES AND ABBREVIATIONS

Date 11/20/2023	Project Number 22047
Application Number -	Drawing Number C0.0
Drawn AT	Checked AT

FILENAME: I:\23-117\CIVIL\DWG\23-117-C00.DWG

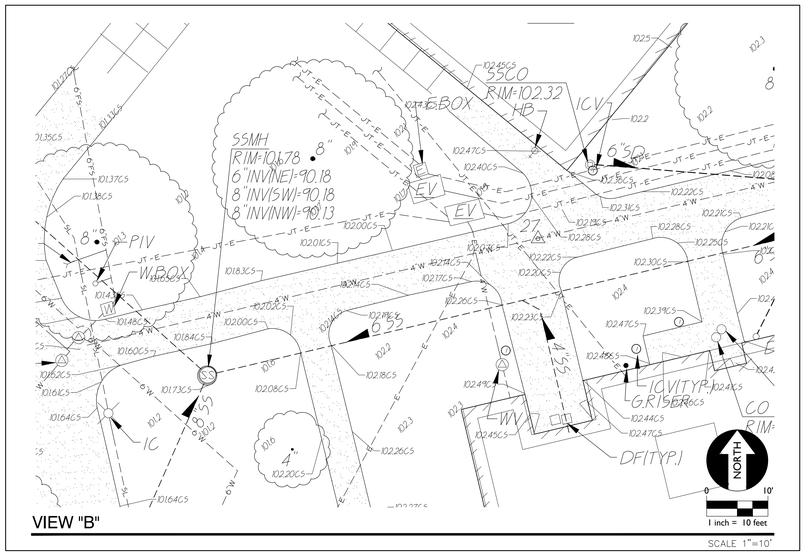

VIEW "B"

SCALE 1"=10'

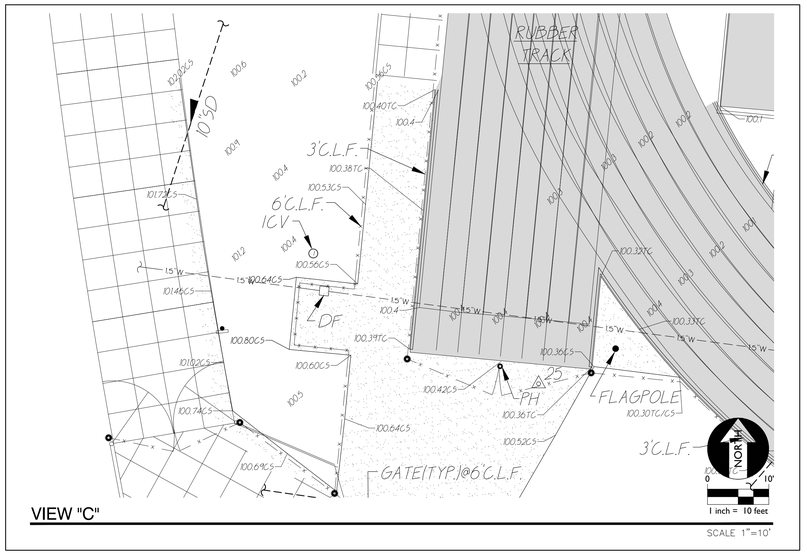

VIEW "C"

SCALE 1"=10'

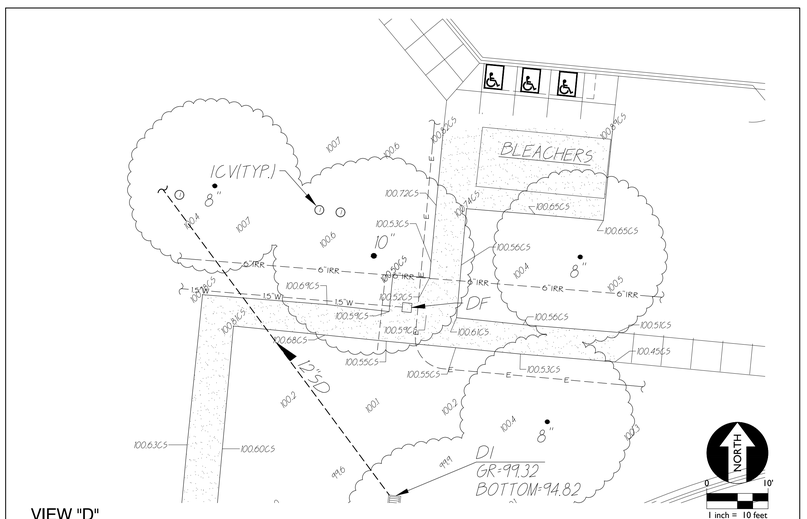

VIEW "D"

SCALE 1"=10'

ABBREVIATIONS

NOTE: NOT ALL ABBREVIATIONS MAY BE USED ON THESE PLANS.

??	UNKNOWN
AC	ASPHALTIC CONCRETE
ACC	ACCESSIBLE
ACU	AIR CONDITIONING UNIT
AD	AREA DRAIN
APN	ASSESSOR'S PARCEL NUMBER
ARV	AIR RELEASE VALVE
BBALL	BASKETBALL POLE
BCM	BRASS CAP MONUMENT
BFP	BACK FLOW PREVENTER
BL	BLOCK
BLDG	BUILDING
BOL	BOLLARD
BOV	BLOW-OFF VALVE
BR.	BRICK
BWF	BARBED WIRE FENCE
C	COMMUNICATION
CATV	CABLE TELEVISION
CIP	CAPPED IRON PIPE
C.L.F.	CHAIN LINK FENCE
C/L	CENTERLINE
CMP	CORRUGATED METAL PIPE
CO	CLEANOUT
COL	COLUMN
CONC.	CONCRETE
COND.	CONDENSATE
CPF	CONTROL POINT FOUND
CPS	CONTROL POINT SET
CS	CONCRETE SURFACE
DF	DRINKING FOUNTAIN
DG	DECOMPOSED GRANITE
DI	DROP INLET
DRWY	DRIVEWAY
DS	DOWNSPOUT
DWG	DRAWING
E	ELECTRIC
EP	EDGE OF PAVEMENT
EV	ELECTRICAL VAULT
FA	FIRE ALARM
FDC	FIRE DEPARTMENT CONNECTION
FFE	FINISHED FLOOR ELEVATION
FH	FIRE HYDRANT
FL	FLOWLINE
FO	FIBER OPTIC
FS	FIRE SERVICE
G	GAS
GB	GRADE BREAK
GR	GRATE
GRB	GROUND ROD BOX
GROD	GROUND ROD
GV	GAS VALVE
HB	HOSE BIBB
HBB	HOSE BIBB BOX
HBD	HEADER BOARD
HP	HIGH PRESSURE
HR	HANDRAIL
HVE	HIGH VOLTAGE ELECTRIC
IC	IN CONCRETE
ICP	IRRIGATION CONTROL PANEL
ICV	IRRIGATION CONTROL VALVE
INV	PIPE INVERT ELEVATION
IRR	IRRIGATION
JP	JOINT UTILITY POLE
JT	JOINT TRENCH
LNDG	LANDING
LVE	LOW VOLTAGE ELECTRIC
M.	METAL
MH	MANHOLE
MS	MOW STRIP
MSC	METAL STORAGE CONTAINER
NTS	NOT TO SCALE
OH	OVERHEAD
OHANG	OVERHANG
OIP	OPEN IRON PIPE
PA	PLANTER AREA
PH	POSTHOLE
PIV	POST INDICATOR VALVE
P/L	PROPERTY LINE
PP	POWER POLE
PRI.	PER RECORD INFORMATION
PUE	PUBLIC UTILITY EASEMENT
PVC	POLYVINYL CHLORIDE
R	RUBBER
RIM	MANHOLE RIM ELEVATION
ROW	RIGHT OF WAY
RW	RETAINING WALL
RWD	REDWOOD TREE
RWL	RAIN WATER LEADER
SB	SIGNAL BOX
SD	STORM DRAIN
SDMH	STORM DRAIN MANHOLE
SIG	SIGNAL
SL	STREET LIGHT
SLB	STREET LIGHT BOX
SS	SANITARY SEWER
SSCO	SANITARY SEWER CLEANOUT
SSMH	SANITARY SEWER MANHOLE
STL.	STEEL
T	TELEPHONE
TBALL	TETHER BALL POLE
TBM	TEMPORARY BENCHMARK
TC	TOP OF CURB
TD	TRENCH DRAIN
TP	TELEPHONE POLE
TRW	TOP OF RETAINING WALL
UG	UNDERGROUND
UNK	UNKNOWN
UON	UNLESS OTHERWISE NOTED
VBALL	VOLLEYBALL
W	WATER
W/	WITH
WD.	WOOD
WF	WOOD FENCE
W.I.F.	WROUGHT IRON FENCE
XF	TRANSFORMER
XWALK	CROSSWALK
YD	YARD DRAIN

EXISTING TOPOGRAPHY

- = PROPERTY LINE
- = CENTERLINE
- = EASEMENT
- = PROPERTY CORNER FOUND AS NOTED
- = PROPERTY CORNER NOTHING FOUND OR SET
- 123 = TEMPORARY BENCHMARK (SEE TBM LIST FOR INFO)
- = SWALE OR DRAINAGE FLOW
- = DRAINAGE FLOW
- = FENCE (TYPE NOTED)
- = TREE (SIZE/TYPE INDICATED)
- = SLOPE
- 100 = CONTOUR
- = CONCRETE SURFACE
- = EDGE OF ASPHALT
- = EDGE OF BUILDING
- = SIGN
- = POST OR BOLLARD
- 99.9 = GROUND ELEVATION
- 99.99 = HARD SURFACE ELEVATION

EXISTING UTILITIES

- 12"SD = STORM DRAIN LINE (SIZE & DIRECTION OF FLOW)
- 12"SD = STORM DRAIN LINE (RECORD INFORMATION)
- 12"SD = STORM DRAIN LINE (UNDERGROUND LOCATING)
- SD = STORM DRAIN MANHOLE
- = STORM DRAIN CLEANOUT
- = drop inlet
- = AREA DRAIN
- RWL = RAIN WATER LEADER
- DS = DOWNSPOUT
- 12"SS = SANITARY SEWER LINE (SIZE & DIRECTION OF FLOW)
- 12"SS = SANITARY SEWER LINE (RECORD INFORMATION)
- 12"SS = SANITARY SEWER LINE (UNDERGROUND LOCATING)
- SS = SANITARY SEWER MANHOLE
- = SANITARY SEWER CLEANOUT
- W = WATER LINE (SIZE INDICATED)
- W = WATER LINE (RECORD INFORMATION)
- W = WATER LINE (UNDERGROUND LOCATING)
- W = WATER MANHOLE
- = WATER VALVE
- = WATER METER
- = WATER BOX
- = IRRIGATION CONTROL VALVE
- = FIRE HYDRANT
- = BACKFLOW PREVENTER
- = SPRINKLER
- = HOSE BIBB
- OH-E = OVERHEAD ELECTRIC LINE
- E = UNDERGROUND ELECTRIC LINE
- E = UNDERGROUND ELECTRIC LINE (RECORD INFORMATION)
- E = UNDERGROUND ELECTRIC LINE (UNDERGROUND LOCATING)
- E = ELECTRIC MANHOLE
- = UTILITY POLE (WITH GUY WIRE)
- = ELECTRIC METER
- = ELECTRIC BOX
- = STREET LIGHTING BOX
- OR = LIGHT STANDARD
- = SIGNAL LIGHT
- = FLOOD LIGHT
- = ELECTRICAL OUTLET
- G = GAS LINE (SIZE INDICATED)
- G = GAS LINE (RECORD INFORMATION)
- G = GAS LINE (UNDERGROUND LOCATING)
- G = GAS MANHOLE
- = GAS VALVE
- = GAS METER
- T = TELEPHONE LINE
- T = TELEPHONE LINE (RECORD INFORMATION)
- T = TELEPHONE LINE (UNDERGROUND LOCATING)
- = STORM DRAIN BOX
- = TRAFFIC SIGNAL BOX

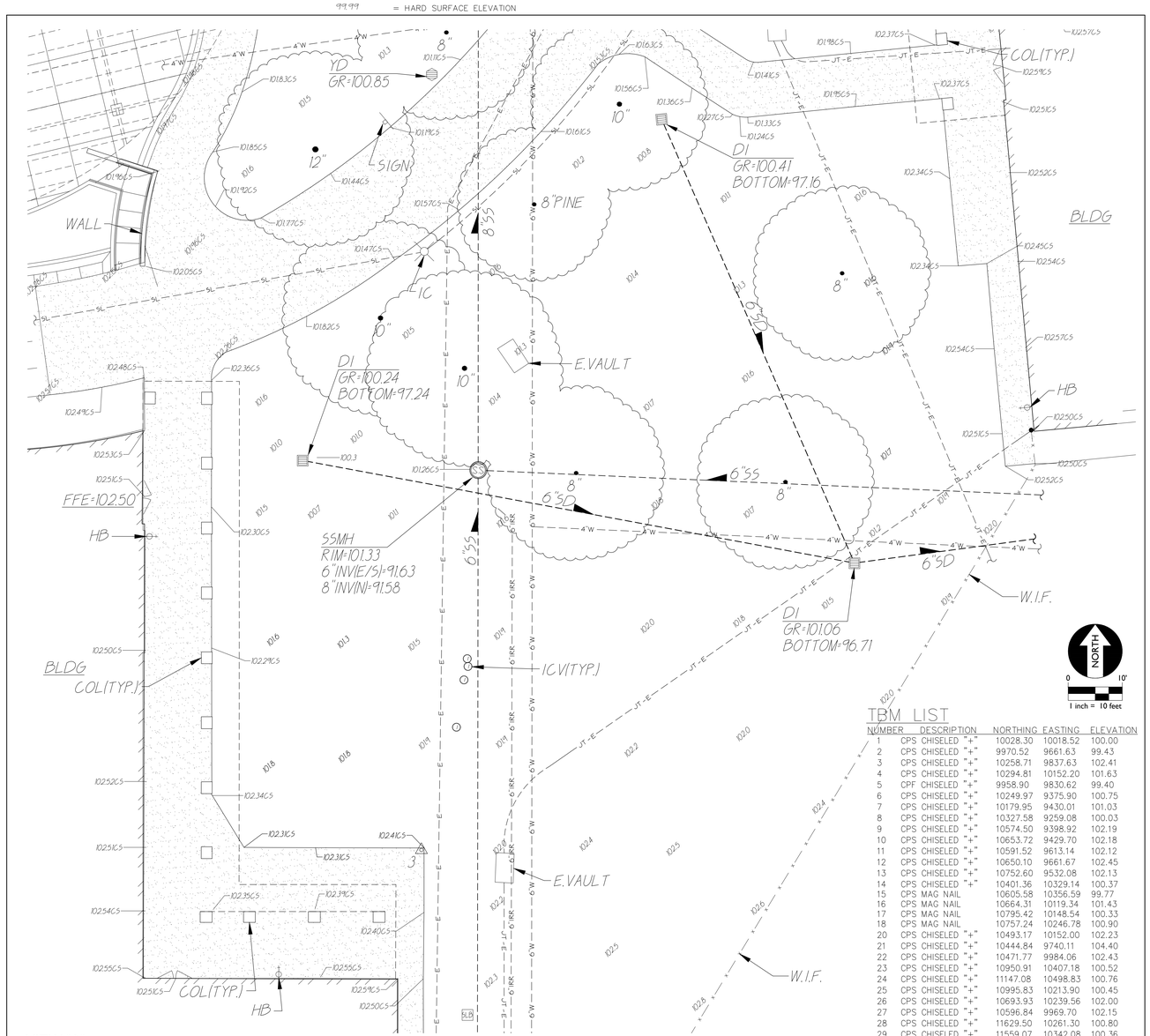

VIEW "A"

SCALE 1"=10'

TBM LIST

NUMBER	DESCRIPTION	NORTHING	EASTING	ELEVATION
1	CPS CHISELED "+"	10028.30	10018.52	100.00
2	CPS CHISELED "+"	9970.52	9661.63	99.43
3	CPS CHISELED "+"	10258.71	9837.63	102.41
4	CPS CHISELED "+"	10294.81	10152.20	101.63
5	CPF CHISELED "+"	9958.90	9830.62	99.40
6	CPS CHISELED "+"	10249.97	9375.90	100.75
7	CPS CHISELED "+"	10179.95	9430.01	101.03
8	CPS CHISELED "+"	10327.58	9259.08	100.03
9	CPS CHISELED "+"	10574.50	9398.92	102.19
10	CPS CHISELED "+"	10653.72	9429.70	102.18
11	CPS CHISELED "+"	10591.52	9613.14	102.12
12	CPS CHISELED "+"	10650.10	9661.67	102.45
13	CPS CHISELED "+"	10752.60	9532.08	102.13
14	CPS CHISELED "+"	10401.36	10329.14	100.37
15	CPS MAG NAIL	10605.58	10356.59	99.77
16	CPS MAG NAIL	10664.31	10119.34	101.43
17	CPS MAG NAIL	10795.42	10148.54	100.33
18	CPS MAG NAIL	10757.24	10246.78	100.90
20	CPS CHISELED "+"	10493.17	10152.00	102.23
21	CPS CHISELED "+"	10444.84	9740.11	104.40
22	CPS CHISELED "+"	10471.77	9984.06	102.43
23	CPS CHISELED "+"	10950.91	10407.18	100.52
24	CPS CHISELED "+"	11147.08	10498.83	100.76
25	CPS CHISELED "+"	10995.83	10213.90	100.45
26	CPS CHISELED "+"	10693.93	10239.56	102.00
27	CPS CHISELED "+"	10596.84	9969.70	102.15
28	CPS CHISELED "+"	11629.50	10261.30	100.80
29	CPS CHISELED "+"	11559.07	10342.08	100.36

DSA STAMP

IDENTIFICATION STAMP
DIV. OF THE STATE ARCHITECT
APP: 02-122281 INC:
REVIEWED FOR
SS ☑ FLS ☑ ACS ☑
DATE: 03/19/2024

STUDIO W ARCHITECTS

Studio W Architects
1930 H Street
Sacramento, California 95811
[T] 916.254.5600
www.StudioW-Architects.com

ARCHITECT	ENGINEER
LICENSED ARCHITECT BRIAN P. WHITMORE No. C 30345 Ren. 9/30/25 STATE OF CALIFORNIA	REGISTERED PROFESSIONAL ENGINEER ANTHONY J. TASSANO NO. C74698 STATE OF CALIFORNIA

GENERAL NOTES

1. This sheet is part of a set and is not to be used alone.
2. This sheet is not to be used for construction unless the architect's stamp and signature appear on the drawings and the status box indicated drawings have been released for construction.
3. These plans and prints thereof, as instruments of service, are owned by the architect and are for use on this project only. Reproduction and/or distribution without the prior written consent of the architect is forbidden.
4. Copyright Studio W Associates, Inc. 2022.

REVISION HISTORY

NO.	REMARKS	DATE

DRAWING STATUS

	DATE
○ DSA PLAN CHECK	
○ DSA BACK CHECK	
○ BIDDING	
○ CONSTRUCTION	

WASHINGTON UNIFIED SCHOOL DISTRICT
930 WESTACRE ROAD
WEST SACRAMENTO, CA 95691

CONSTRUCTION DOCUMENTS

WUSD RIVER CITY HIGH SCHOOL
ESSR III
1 RAIDER LANE
WEST SACRAMENTO, CA 95691

TOPOGRAPHIC SURVEY

Date 11/20/2023	Project Number 22047
Application Number -	Drawing Number C0.1
Drawn AT	Checked AT

FILENAME: I:\23-117\CIVIL\DWG\23-117-C01.DWG

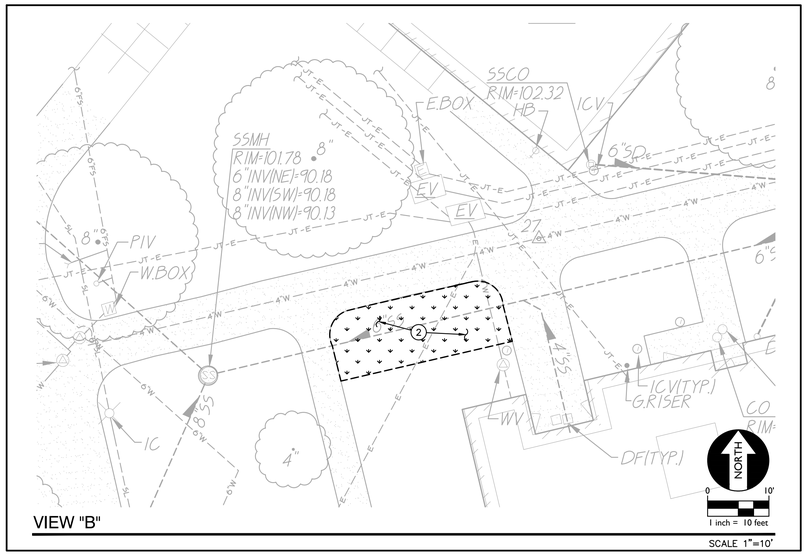

VIEW "B"

SCALE 1"=10'

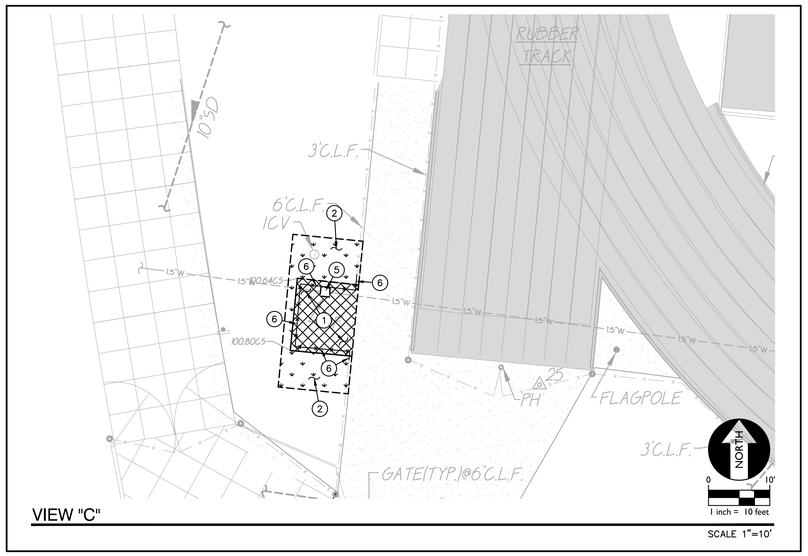

VIEW "C"

SCALE 1"=10'

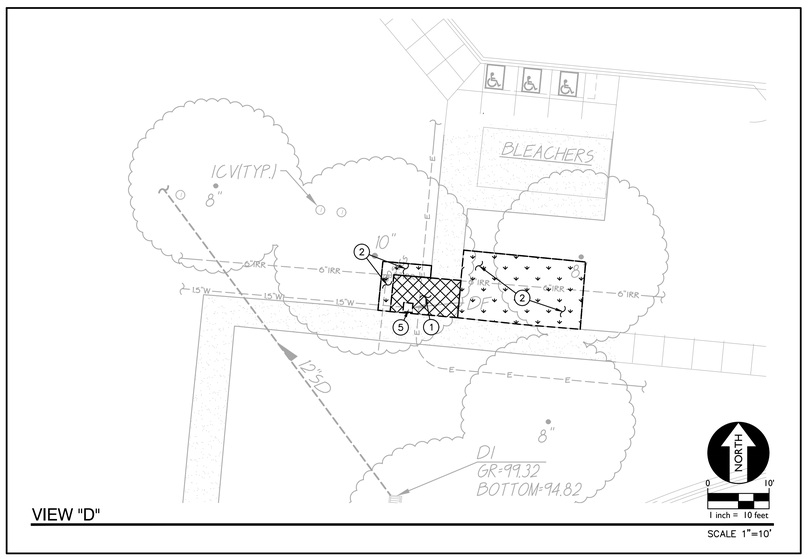

VIEW "D"

SCALE 1"=10'

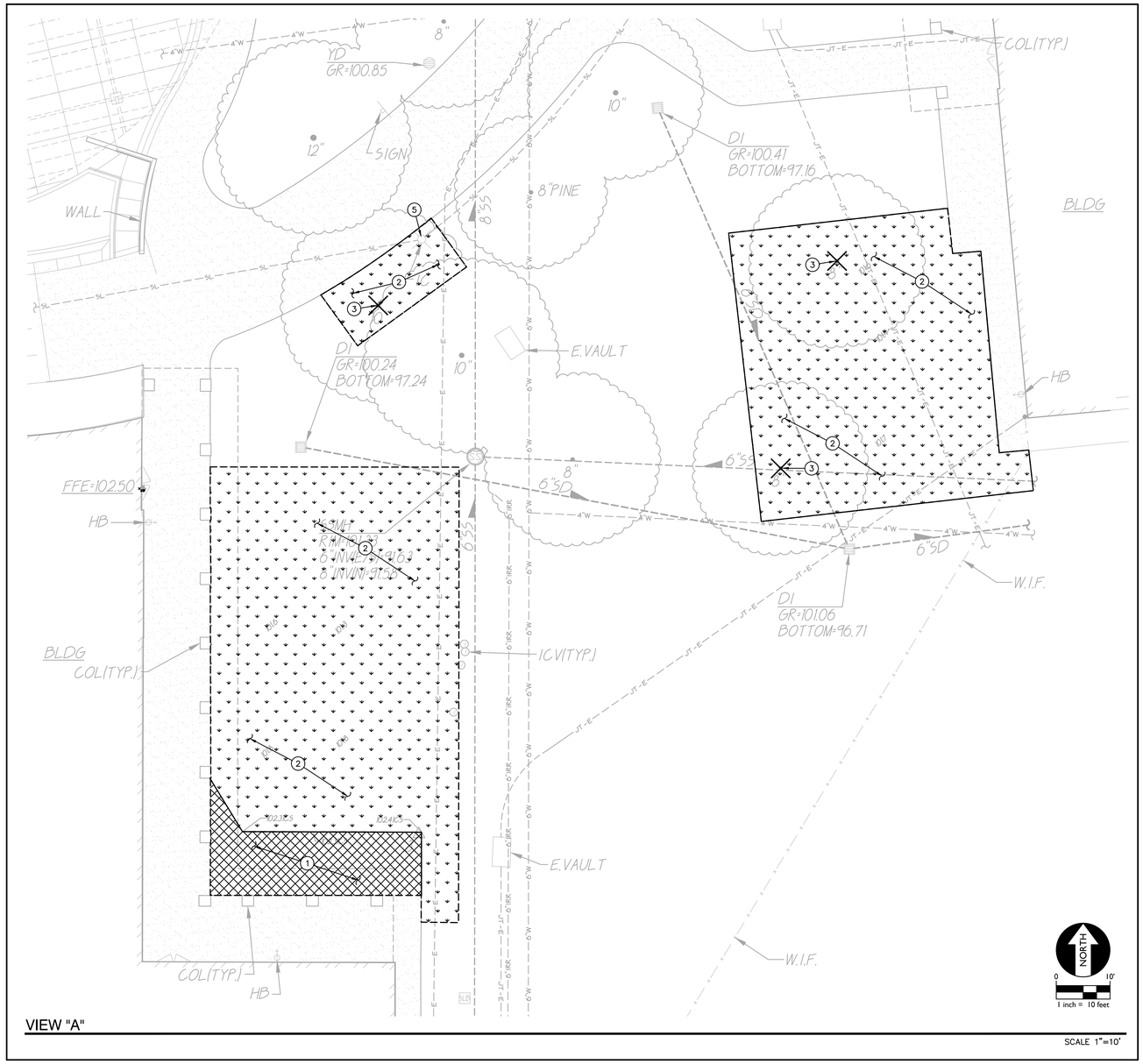

VIEW "A"

SCALE 1"=10'

DEMOLITION NOTES

1. SAWCUT, REMOVE AND DISPOSE OF EXISTING CONCRETE PAVING TO NEAREST JOINT AND ASSOCIATED AGGREGATE BASE. SAWCUT SHALL BE A NEAT STRAIGHT LINE. MAINTAIN CLEAN, STRAIGHT CUT EDGE UNTIL NEW PAVING IS PLACED.
2. REMOVE AND DISPOSE OF EXISTING LANDSCAPING,TURF AND ASSOCIATED IRRIGATION PIPING/SPRINKLERS WITHIN AREAS OF WORK. CUT AND CAP ANY MAINLINES NEAR WHERE THEY ENTER THE BOUNDARY OF THE PROJECT. MARK ALL CAPPED LINES WITH AN IRRIGATION VALVE BOX. ALL EXISTING IRRIGATION AREAS OUTSIDE THE PROJECT WORK AREA SHALL BE PRESERVED AND OPERATIONAL. INTEGRITY SHALL BE MAINTAINED WITH PROPER SPRINKLER COVERAGE TO TURF AREAS TO REMAIN.
3. REMOVE AND DISPOSE OF EXISTING TREE, TRUNK AND ASSOCIATED ROOTS.
4. EXISTING LIGHT STANDARD TO REMAIN.
5. REMOVE AND DISPOSE OF EXISTING DRINKING FOUNTAIN. CAP EXISTING SEWER PIPE BELOW GRADE.
6. REMOVE AND DISPOSE OF EXISTING FENCE, POSTS AND ASSOCIATED FOOTINGS TO EXTENT SHOWN.

DSA STAMP

IDENTIFICATION STAMP
DIV. OF THE STATE ARCHITECT
APP: 02-122281 INC:
REVIEWED FOR
SS ☑ FLS ☑ ACS ☑
DATE: 03/19/2024

STUDIO W ARCHITECTS

Studio W Architects
1930 H Street
Sacramento, California 95811
[T] 916.254.5600
www.StudioW-Architects.com

ARCHITECT	ENGINEER
LICENSED ARCHITECT BRIAN P. WHITMORE No. C 30345 Ren. 9/30/25 STATE OF CALIFORNIA	REGISTERED PROFESSIONAL ENGINEER ANTHONY J. TASSANO NO. C74898 STATE OF CALIFORNIA

GENERAL NOTES

1. This sheet is part of a set and is not to be used alone.
2. This sheet is not to be used for construction unless the architect's stamp and signature appear on the drawings and the status box indicated drawings have been released for construction.
3. These plans and prints thereof, as instruments of service, are owned by the architect and are for use on this project only. Reproduction and/or distribution without the prior written consent of the architect is forbidden.
4. Copyright Studio W Associates, Inc. 2022.

REVISION HISTORY

NO.	REMARKS	DATE

DRAWING STATUS

	DATE
DSA PLAN CHECK	
DSA BACK CHECK	
BIDDING	
CONSTRUCTION	

WASHINGTON UNIFIED SCHOOL DISTRICT
930 WESTACRE ROAD
WEST SACRAMENTO, CA 95691

CONSTRUCTION DOCUMENTS

WUSD RIVER CITY HIGH SCHOOL
ESSR III
1 RAIDER LANE
WEST SACRAMENTO, CA 95691

DEMOLITION PLAN

Date	Project Number
11/20/2023	22047
Application Number	Drawing Number
-	C1.1
Drawn: AT	Checked: AT

FILENAME: I:\23-117\CIVIL\DWG\23-117-C11.DWG

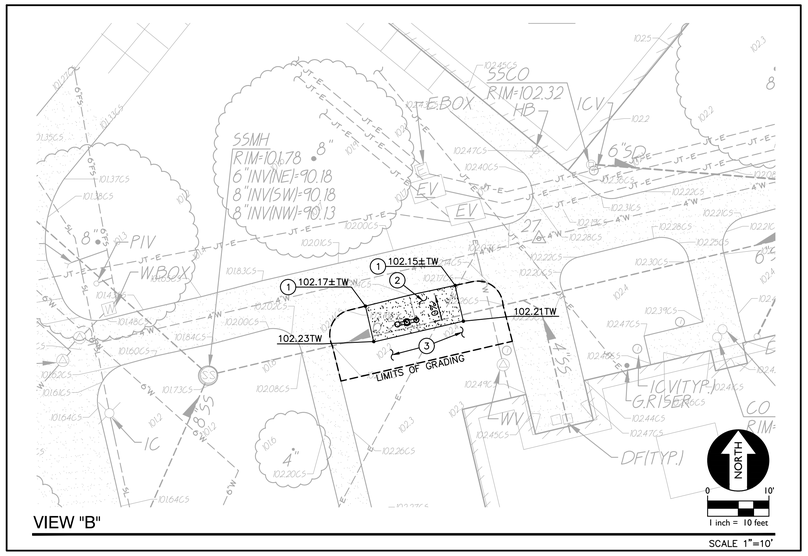

VIEW "B"

SCALE 1"=10'

VIEW "C"

SCALE 1"=10'

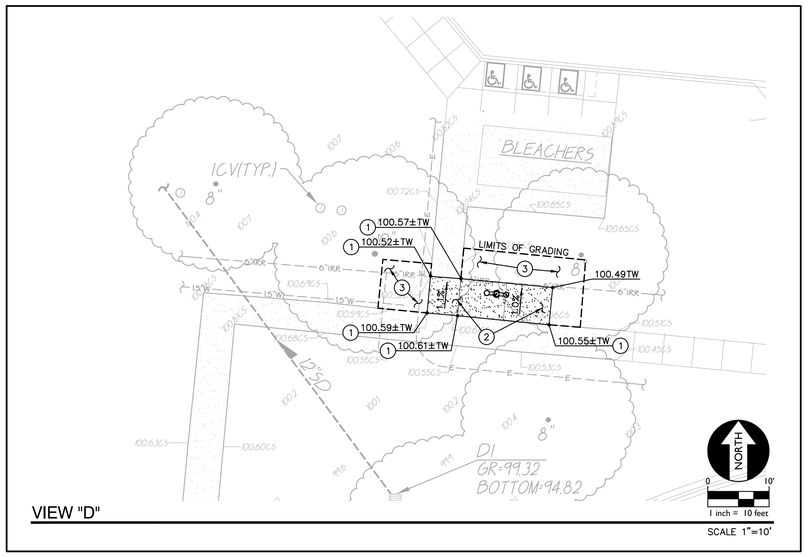

VIEW "D"

SCALE 1"=10'

VIEW "A"

SCALE 1"=10'

SUBGRADE PREPARATION

1. FOLLOWING SITE DEMOLITION ACTIVITIES:

   EXCAVATE DOWN TO ROUGH SUBGRADE ELEVATION, SCARIFY THE EXISTING SOILS TO A MINIMUM DEPTH OF 12 INCHES, MOISTURE CONDITION TO AT LEAST 2 PERCENT ABOVE THE OPTIMUM MOISTURE AND COMPACT TO AT LEAST 90 PERCENT OF THE MAXIMUM DRY DENSITY DETERMINED BY THE ASTM D1557 TEST METHOD.

GRADING AND PAVING NOTES

1. MATCH EXISTING GRADE/ELEVATION.
2. CONSTRUCT CONCRETE FLATWORK PER (1/C4.1) PLACE 5"PCC WITH #4 REBAR AT 24" O.C.E.W. OVER 12" CLASS II AB ON A TENSAR BX1100 GEOGRID ON COMPACTED SUBGRADE.
3. PLACE SOD IN ALL AREAS DISTURBED BY CONSTRUCTION ACTIVITIES THAT ARE NOT TO RECEIVE PAVEMENT. PROVIDE NEW SPRINKLER HEADS AND PIPING AS REQUIRED TO ACHIEVE PROPER COVERAGE.

DSA STAMP

IDENTIFICATION STAMP
DIV. OF THE STATE ARCHITECT
APP: 02-122281 INC:
REVIEWED FOR
SS ☑ FLS ☑ ACS ☑
DATE: 03/19/2024

STUDIO W ARCHITECTS

Studio W Architects
1930 H Street
Sacramento, California 95811
[T] 916.254.5600
www.StudioW-Architects.com

ARCHITECT	ENGINEER
LICENSED ARCHITECT BRIAN P. WHITMORE No. C 30345 Ren. 9/30/25 STATE OF CALIFORNIA	REGISTERED PROFESSIONAL ENGINEER ANTHONY J. TASSANO NO. C74898 STATE OF CALIFORNIA

GENERAL NOTES

1. This sheet is part of a set and is not to be used alone.
2. This sheet is not to be used for construction unless the architect's stamp and signature appear on the drawings and the status box indicated drawings have been released for construction.
3. These plans and prints thereof, as instruments of service, are owned by the architect and are for use on this project only. Reproduction and/or distribution without the prior written consent of the architect is forbidden.
4. Copyright Studio W Associates, Inc. 2022.

REVISION HISTORY

NO.	REMARKS	DATE

DRAWING STATUS

	DATE
○ DSA PLAN CHECK	
○ DSA BACK CHECK	
○ BIDDING	
○ CONSTRUCTION	

WASHINGTON UNIFIED SCHOOL DISTRICT
930 WESTACRE ROAD
WEST SACRAMENTO, CA 95691

CONSTRUCTION DOCUMENTS

WUSD RIVER CITY HIGH SCHOOL
ESSR III
1 RAIDER LANE
WEST SACRAMENTO, CA 95691

GRADING AND PAVING PLAN

Date 11/20/2023	Project Number 22047
Application Number -	Drawing Number C2.1
Drawn AT	Checked AT

FILENAME: I:\23-117\CIVIL\DWG\23-117-C21.DWG

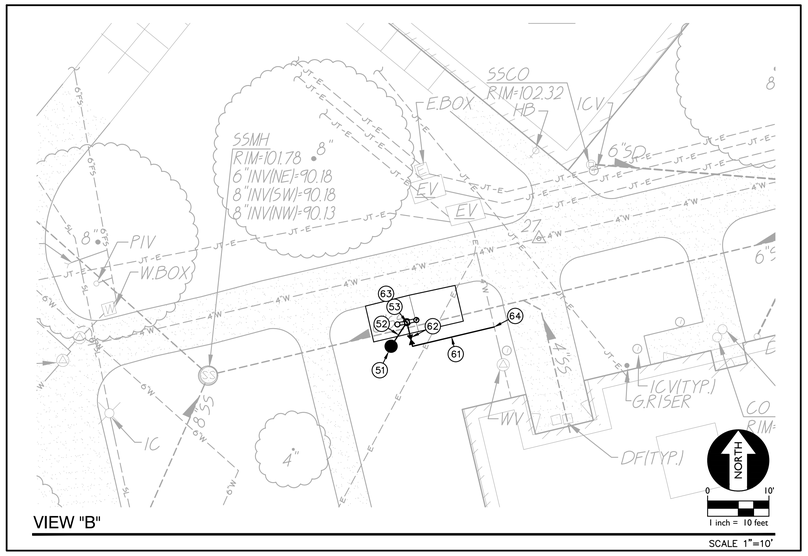

VIEW "B"

SCALE 1"=10'

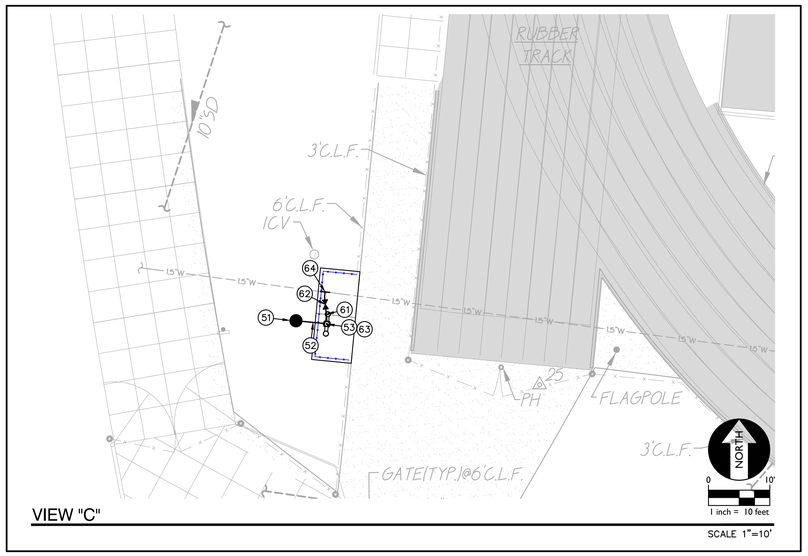

VIEW "C"

SCALE 1"=10'

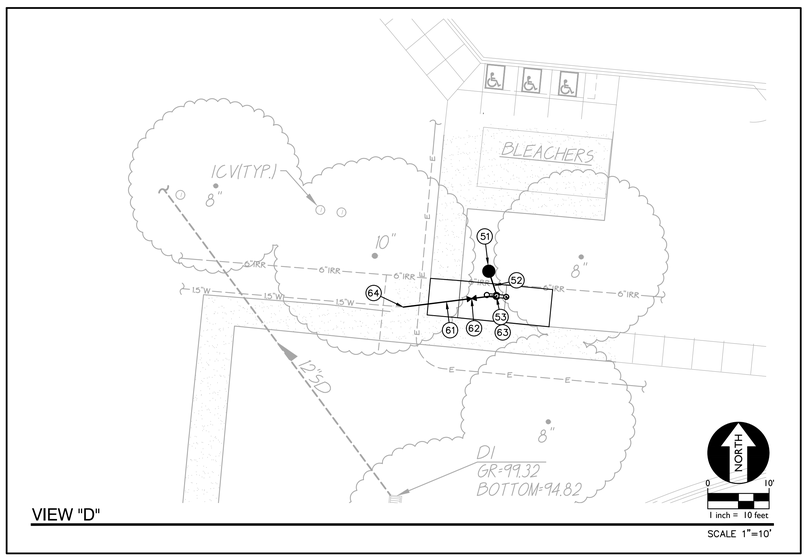

VIEW "D"

SCALE 1"=10'

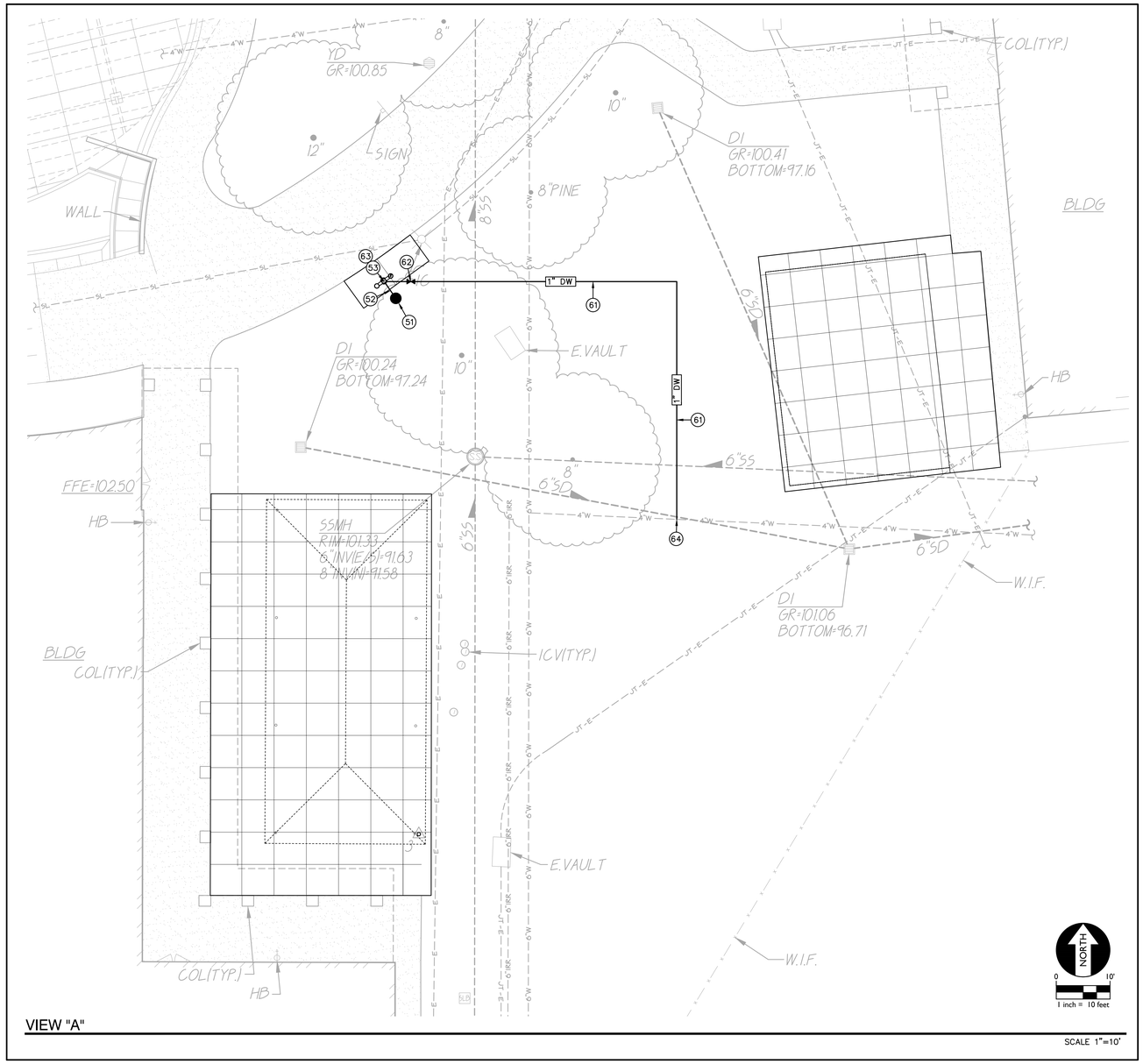

VIEW "A"

SCALE 1"=10'

GENERAL NOTE: TURF DAMAGED BY TRENCHING ACTIVITIES SHALL BE REPLACED WITH SOD. IRRIGATION DAMAGED BY TRENCHING ACTIVITIES SHALL BE REPAIRED TO BE FULLY FUNCTIONAL.

SEWER NOTES

51. CONSTRUCT DRYWELL AT DRINKING FOUNTAIN PER (2/C4.1)
52. PLACE 2" SEWER FROM FOUNTAIN TO DRYWELL.
53. CONNECT TO DRINKING FOUNTAIN SEWER SERVICE. PROVIDE ALL FITTINGS NECESSARY TO MAKE CONNECTION.

WATER NOTES

61. PLACE 1" WATER, SCH 80 PVC PER (3/C4.1)
62. PLACE BRONZE GATE VALVE AND VALVE BOX. SIZE TO MATCH LINE SIZE. (4/C4.1)
63. CONNECT TO DRINKING FOUNTAIN DOMESTIC WATER SUPPLY. PROVIDE ALL FITTINGS NECESSARY TO MAKE CONNECTION.
64. CONNECT TO EXISTING DOMESTIC WATER LINE. FIELD VERIFY EXACT DEPTH AND LOCATION PRIOR TO TRENCHING. PROVIDE ALL FITTINGS NECESSARY TO MAKE CONNECTION.

DSA STAMP

IDENTIFICATION STAMP
DIV. OF THE STATE ARCHITECT
APP: 02-122281 INC:
REVIEWED FOR
SS ☑ FLS ☑ ACS ☑
DATE: 03/19/2024

STUDIO W ARCHITECTS

Studio W Architects
1930 H Street
Sacramento, California 95811
[T] 916.254.5600
www.StudioW-Architects.com

ARCHITECT	ENGINEER
LICENSED ARCHITECT BRIAN P. WHITTMORE No. C 30345 Ren. 9/30/25 STATE OF CALIFORNIA	REGISTERED PROFESSIONAL ENGINEER ANTHONY J. TASSANO NO. C74898 STATE OF CALIFORNIA

GENERAL NOTES

1. This sheet is part of a set and is not to be used alone.
2. This sheet is not to be used for construction unless the architect's stamp and signature appear on the drawings and the status box indicated drawings have been released for construction.
3. These plans and prints thereof, as instruments of service, are owned by the architect and are for use on this project only. Reproduction and/or distribution without the prior written consent of the architect is forbidden.
4. Copyright Studio W Associates, Inc. 2022.

REVISION HISTORY

NO.	REMARKS	DATE

DRAWING STATUS

	DATE
DSA PLAN CHECK	
DSA BACK CHECK	
BIDDING	
CONSTRUCTION	

WASHINGTON UNIFIED SCHOOL DISTRICT
930 WESTACRE ROAD
WEST SACRAMENTO, CA 95691

CONSTRUCTION DOCUMENTS

WUSD RIVER CITY HIGH SCHOOL
ESSR III
1 RAIDER LANE
WEST SACRAMENTO, CA 95691

UTILITY PLAN

Date	Project Number
11/20/2023	22047
Application Number	Drawing Number
-	C3.1
Drawn: AT	Checked: AT

FILENAME: I:\23-117\CIVIL\DWG\23-117-C31.DWG

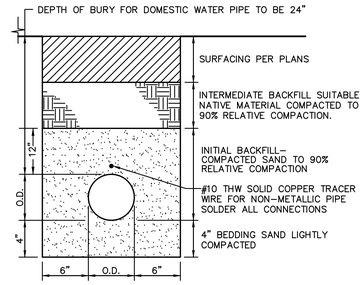

3 / C4.1 WATER TRENCH

NO SCALE

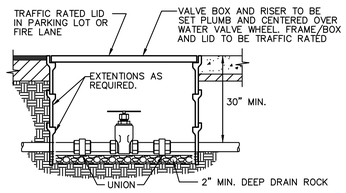

4 / C4.1 WATER VALVE

1/2" TO 3" PIPE

NO SCALE

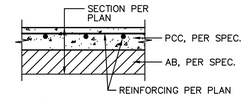

TYPICAL SECTION

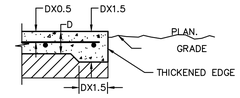

TYPICAL THICKENED EDGE

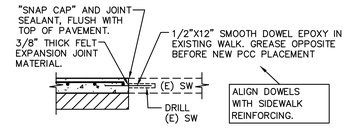

CONNECTION TO (E) CONCRETE

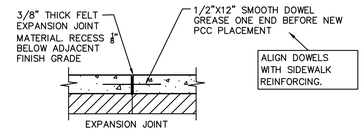

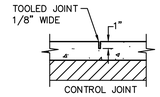

NOTES:
1. PROVIDE FELT EXPANSION JOINTS AT 20 FEET O.C MAX.. PROVIDE CONTROL JOINTS AT 8 FEET O.C. MAX.
2. EXPANSION OR CONTROL JOINTS SHALL NOT EXCEED 1/2" IN SURFACE WIDTH.

1 / C4.1 CONCRETE SIDEWALK

NO SCALE

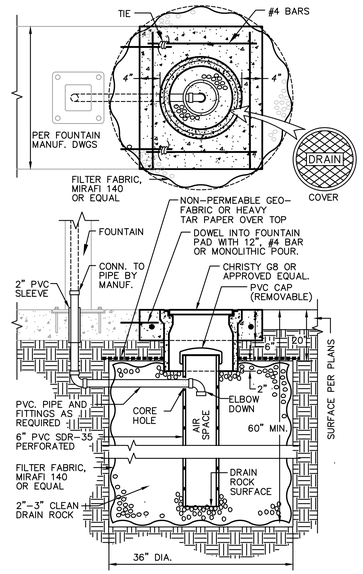

2 / C4.1 DRINKING FOUNTAIN DRYWELL

FOR DRINKING FOUNTAIN ONLY

NO SCALE

DSA STAMP

IDENTIFICATION STAMP
DIV. OF THE STATE ARCHITECT
APP: 02-122281 INC:
REVIEWED FOR
SS ☑ FLS ☑ ACS ☑
DATE: 03/19/2024

STUDIO W ARCHITECTS

Studio W Architects
1930 H Street
Sacramento, California 95811
[T] 916.254.5600
www.StudioW-Architects.com

ARCHITECT	ENGINEER
LICENSED ARCHITECT BRIAN P. WHITMORE No. C 30345 Ren. 9/30/25 STATE OF CALIFORNIA	REGISTERED PROFESSIONAL ENGINEER ANTHONY J. TASSANO NO. C74696 STATE OF CALIFORNIA

GENERAL NOTES

1. This sheet is part of a set and is not to be used alone.
2. This sheet is not to be used for construction unless the architect's stamp and signature appear on the drawings and the status box indicated drawings have been released for construction.
3. These plans and prints thereof, as instruments of service, are owned by the architect and are for use on this project only. Reproduction and/or distribution without the prior written consent of the architect is forbidden.
4. Copyright Studio W Associates, Inc. 2022.

REVISION HISTORY

NO.	REMARKS	DATE

DRAWING STATUS

	DATE
○ DSA PLAN CHECK	
○ DSA BACK CHECK	
○ BIDDING	
○ CONSTRUCTION	

WASHINGTON UNIFIED SCHOOL DISTRICT
930 WESTACRE ROAD
WEST SACRAMENTO, CA 95691

CONSTRUCTION DOCUMENTS

WUSD RIVER CITY HIGH SCHOOL
ESSR III
1 RAIDER LANE
WEST SACRAMENTO, CA 95691

DETAILS AND SECTIONS

Date 11/20/2023	Project Number 22047
Application Number -	Drawing Number C4.1
Drawn AT / Checked AT	

FILENAME: I:\23–117\CIVIL\DWG\23–117–C41.DWG

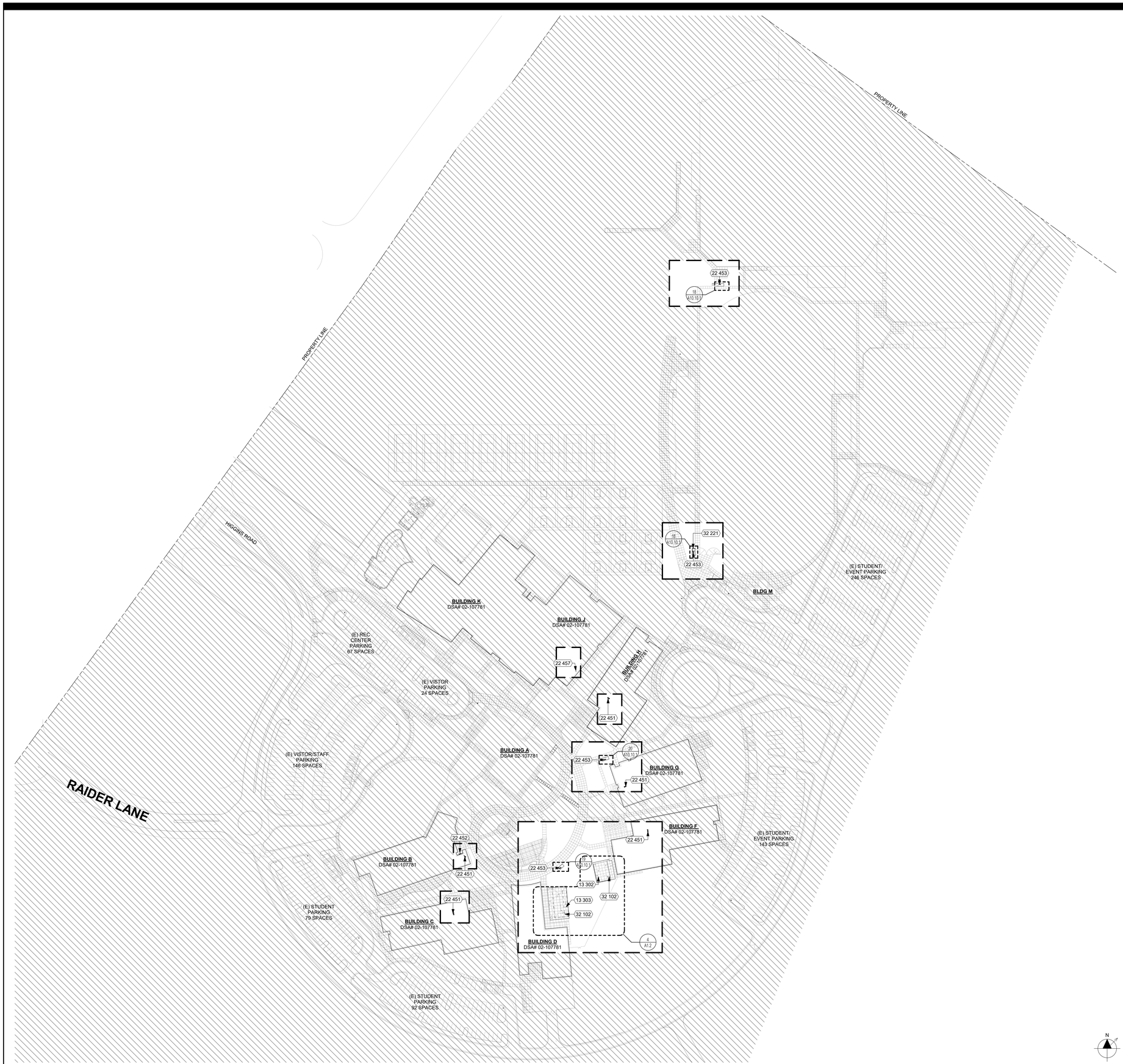

SITE PLAN 1" = 80'-0" 10

KEYNOTES

NUMBER	NOTE
13 302	NEW FABRIC SHADE STRUCTURE (SEE PC DRAWINGS)
13 303	NEW METAL SHADE STRUCTURE (SEE PC DRAWINGS)
22 451	HI-LO INTERIOR DRINKING FOUNTAIN WITH BOTTLE FILLER (SEE DETAIL 1/A10.10.1)
22 452	HI-LO EXTERIOR DRINKING FOUNTAIN WITH BOTTLE FILLER (SEE DETAIL 2/A10.10.1)
22 453	HI-LO FREE STANDING DRINKING FOUNTAIN WITH BOTTLE FILLER (SEE DETAIL 4/A10.10.1)
22 457	BOTTLE FILLER (SEE DETAIL 16/A10.10.1)
32 102	CONCRETE PAVING (SEE CIVIL DWGS.)
32 221	CHAIN LINK FENCE, SEE 4/A10.2.1

GENERAL NOTES

1. CONTRACTOR IS RESPONSIBLE FOR 6'-0" HIGH TEMPORARY CONSTRUCTION BARRIER WITH VISION SCREEN AT STAGING, STORAGE AND CONSTRUCTION AREA WITH SIGNAGE EVERY 20'-0" TO WARN STUDENTS OF CONSTRUCTION AREA.
2. CONTRACTOR TO BRING IN OFFICE TRAILER TO CONSTRUCTION AREA.
3. CONTRACTOR SHALL ACCESS THE SITE FROM RAIDER LANE. ANY DAMAGE TO FIRE LANE WILL BE AT THE CONTRACTOR'S EXPENSE.
4. CONTRACTOR TO REPAIR BACK TO EXISTING CONDITIONS ALL LAYDOWN AREAS AT THE END OF CONSTRUCTION. THIS INCLUDES LANDSCAPE AREAS AND ANY BROKEN SPRINKLERS, VALVE BOXES, CONCRETE, ASPHALT, ETC.
5. CONTRACTOR SHALL REPLACE, RECONSTRUCT AND REPAIR ALL EXISTING WORK THAT IS IMPACTED, DAMAGED, OR DESTROYED AS A RESULT OF ANY CONTRACTOR WORK INCLUDING, BUT NOT LIMITED TO, HARDSCAPING, SIDEWALKS, IRRIGATION SYSTEMS, LANDSCAPING, LAWNS, STRUCTURES AND UTILITIES - ALL TO THE SATISFACTION OF THE DISTRICT.
6. WHERE ASPHALT OR CONCRETE IS BEING REPATCHED, CONTRACTOR SHALL PROVIDE EVEN AND STRAIGHT LINE CUTS WITH 2-FOOT STRAIGHT SLURRY SEAL SURFACE PATCH ON BOTH SIDES OF CUT.
7. CONTRACTOR SHALL EXERCISE EXTREME CAUTION IN EXCAVATING AND TRENCHING ON SITE TO AVOID EXISTING DUCTS, PIPING OR CONDUITS, ETC., AND TO PREVENT HAZARDS TO PERSONNEL AND/OR DAMAGE TO EXISTING UNDERGROUND UTILITIES OR STRUCTURES WHETHER OR NOT SHOWN AND INSTALLED BY ANY OTHER CONTRACTS. THE ARCHITECT IS NOT RESPONSIBLE FOR THE LOCATION OF UNDERGROUND UTILITIES OR STRUCTURES WHETHER OR NOT SHOWN OR DETAILED AND INSTALLED BY ANY OTHER CONTRACTS. THE CONTRACTOR SHALL IMMEDIATELY NOTIFY THE ARCHITECT SHOULD SUCH UNIDENTIFIED CONDITIONS BE DISCOVERED. THESE DRAWINGS AND SPECIFICATIONS DO NOT INCLUDE THE NECESSARY ELEMENTS FOR CONSTRUCTION SAFETY.
8. GATES IN PATH OF TRAVEL SHALL COMPLY WITH EXIT DOOR REQUIREMENTS WITH PROPER LEVER HARDWARE AND KICK PLATES.
9. CONTRACTOR TO TAKE PHOTOS PRIOR TO REMOVAL.
10. SALVAGE ALL DRINKING FOUNTAINS AND RETURN TO DISTRICT.
11. CONTRACTOR SHALL RE-ROUTE AND REPAIR ANY IRRIGATION LINES AND HEADS IN THE WAY OF NEW WORK TO ENSURE A FULLY FUNCTIONNG SYSTEM AT THE END OF CONSTRUCTION.

LEGEND

PROPERTY LINE

LIMIT OF WORK

NOT IN SCOPE

FIRE HYDRANT

(N) CONCRETE PAVING, SEE CIVIL DRAWINGS

DSA STAMP

IDENTIFICATION STAMP
DIV. OF THE STATE ARCHITECT
APP: 02-122281 INC:
REVIEWED FOR
SS ☑ FLS ☑ ACS ☑
DATE: 03/19/2024

STUDIO W ARCHITECTS

Studio W Architects
1930 H Street
Sacramento, California 95811
[T] 916.254.5600
www.StudioW-Architects.com

ARCHITECT	ENGINEER
LICENSED ARCHITECT BRYAN P WHITMORE No. C 30345 Ren. 12/31/25 STATE OF CALIFORNIA DATE SIGNED: 03/14/2024	

GENERAL NOTES

1. This sheet is part of a set and is not to be used alone.
2. This sheet is not to be used for construction unless the architect's stamp and signature appear on the drawings and the status box indicated drawings have been released for construction.
3. These plans and prints thereof, as instruments of service, are owned by the architect and are for use on this project only. Reproduction and/or distribution without the prior written consent of the architect is forbidden.
4. Copyright Studio W Associates, Inc. 2023.

REVISION HISTORY

NO.	REMARKS	DATE

DRAWING STATUS

	DATE
◯ DSA PLAN CHECK	
◯ DSA BACK CHECK	
◯ BIDDING	
◯ CONSTRUCTION	

KEY PLAN

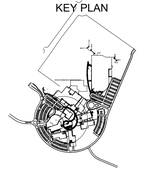

WASHINGTON UNIFIED SCHOOL DISTRICT
930 WESTACRE ROAD
WEST SACRAMENTO, CA 95691

PROJECT STATUS

WUSD RIVER CITY HIGH SCHOOL
ESSR III
1 RAIDER LANE
WEST SACRAMENTO, CA 95691

SITE PLAN OVERALL

Date 03/14/2024	Project Number 22047
Application Number 02-122281	Drawing Number A1.1
Drawn / Author	Checked / Checker

PRINT DATE: 3/18/2024 12:27:33 PM
FILE PATH: BIM 360/22047 Washington USD River City HS/22047-WUSD River City High School-Site-M21.rvt

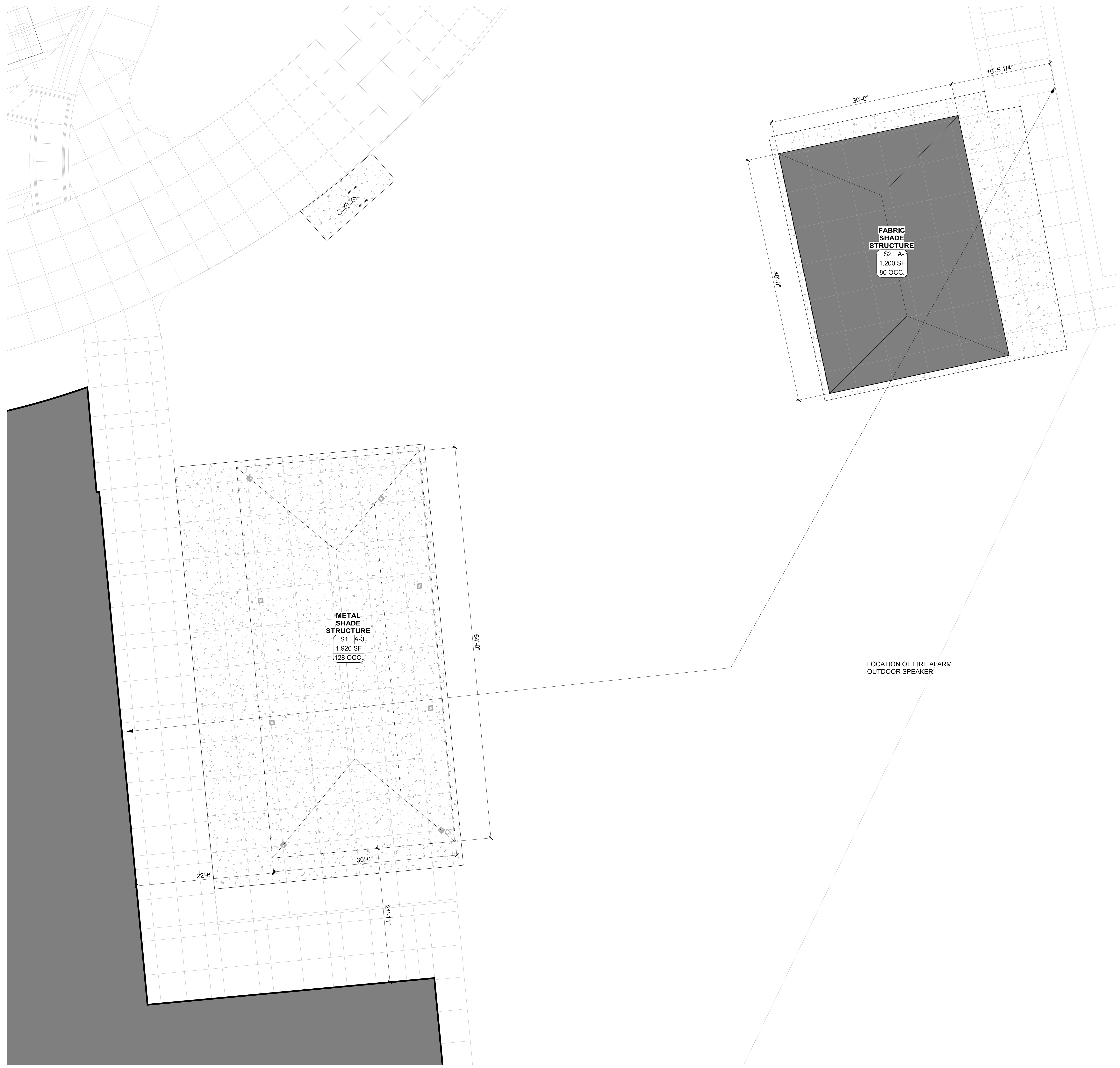

REF: 10 / A1.1

ENLARGED SHADE STRUCTURE | 1/8" = 1'-0" | 4

NOTES:

1. REFER TO MANUFACTURER'S SHEET 26.1-1000 FOR FRAME AND SHEET 26.2-2000 FOR ROOF COVERING MATERIAL.
2. LOCATION OF NEW SHADE STRUCTURES DOES NOT BLOCK REQUIRED EXITS OR EXIT ROUTE. CLEAR HEIGHT OF SHADE STRUCTURES SHALL BE 10'-0".
3. OCCUPANT LOAD FOR SHADE STRUCTURES SHALL BE PER DSA IR 31-1.
4. ACCESSIBLE GATES WITH PANIC HARDWARE AND "NIGHT LATCH" (NL) FUNCTION SHALL BE DOGGED DURING THE TIME THE FACILITY IS OPEN, TYPICAL. THE DOGGING OPERATION WILL BE PERFORMED ONLY BY EMPLOYEES AS THEIR JOB FUNCTION.

LEGEND

ROOM (A101 | B / 150 SF / 1 OCC.)

ROOM = ROOM NAME
A101 = ROOM NUMBER
B = OCCUPANCY GROUP
150 SF = FLOOR AREA IN SQUARE FEET
1 OCC = OCCUPANT LOAD (CBC TABLE 1004.5)

BUILDING UNDER SCOPE OF WORK

(N) SHADE STRUCTURE (UNDER THIS SCOPE OF WORK)

(N) CONCRETE PAVING, SEE CIVIL DRAWINGS

DSA STAMP

IDENTIFICATION STAMP
DIV. OF THE STATE ARCHITECT
APP: 02-122281 INC:
REVIEWED FOR
SS ☑ FLS ☑ ACS ☑
DATE: 03/19/2024

STUDIO W
ARCHITECTS

Studio W Architects
1930 H Street
Sacramento, California 95811
[T] 916.254.5600
www.StudioW-Architects.com

ARCHITECT	ENGINEER
LICENSED ARCHITECT BRIAN P WHITMORE No. C 30345 Ren. 9/30/25 STATE OF CALIFORNIA DATE SIGNED: 03/14/2024	

GENERAL NOTES

1. This sheet is part of a set and is not to be used alone.
2. This sheet is not to be used for construction unless the architect's stamp and signature appear on the drawings and the status box indicated drawings have been released for construction.
3. These plans and prints thereof, as instruments of service, are owned by the architect and are for use on this project only. Reproduction and/or distribution without the prior written consent of the architect is forbidden.
4. Copyright Studio W Associates, Inc. 2023.

REVISION HISTORY

NO.	REMARKS	DATE

DRAWING STATUS | DATE

- ○ DSA PLAN CHECK
- ○ DSA BACK CHECK
- ○ BIDDING
- ○ CONSTRUCTION

KEY PLAN

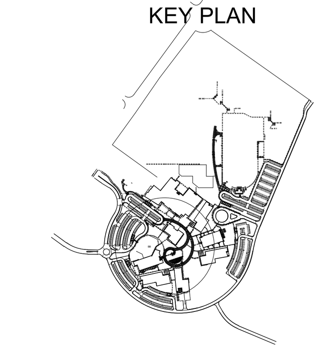

WASHINGTON UNIFIED SCHOOL DISTRICT
930 WESTACRE ROAD
WEST SACRAMENTO, CA 95691

PROJECT STATUS

WUSD RIVER CITY HIGH SCHOOL
ESSR III
1 RAIDER LANE
WEST SACRAMENTO, CA 95691

ENLARGED SHADE STRUCTURES

Date	Project Number
03/14/2024	22047
Application Number	Drawing Number
02-122281	A1.2
Drawn: Author	Checked: Checker

PRINT DATE: 3/18/2024 12:27:35 PM
FILE PATH: BIM 360://22047 Washington USD River City HS/22047-WUSD River City High School-Site-A21.rvt

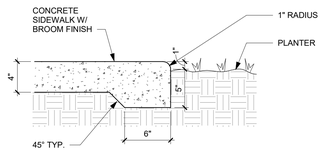

REF: 18 / A10.10.1

SIDEWALK AT PLANTER 1 1/2" = 1'-0" (1)

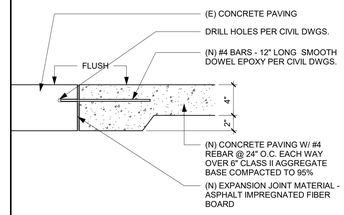

REF: 18 / A10.10.1

(N) PAVING TO (E) PAVING 1 1/2" = 1'-0" (2)

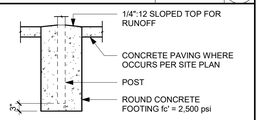

CHAIN LINK: 6'-0" HIGH	
TYPE	**POST FOOTING**
CORNER, END, AND PULL POSTS	39" x 14" DIA.
LINE POSTS	36" x 12" DIA.
GATE AND LATCH POSTS: 3'-0" TO 5'-0" WIDE	48" x 14" DIA.
GATE AND LATCH POSTS: 10'-0" WIDE	48" x 18" DIA.
GATE AND LATCH POSTS: 12'-0" WIDE	48" x 26" DIA.

ORNAMENTAL: 6'-0" HIGH	
TYPE	**POST FOOTING**
SINGLE GATE: 4'-0" WIDE	4'-8" x 14" Ø
SINGLE GATE: 5' TO 11'-11" WIDE	5'-6" x 24" Ø
TERMINAL OR LINE POST OR GATE STOP	2'-6" x 14" Ø

FENCE FOOTING SCHEDULE 1/2" = 1'-0" (3)

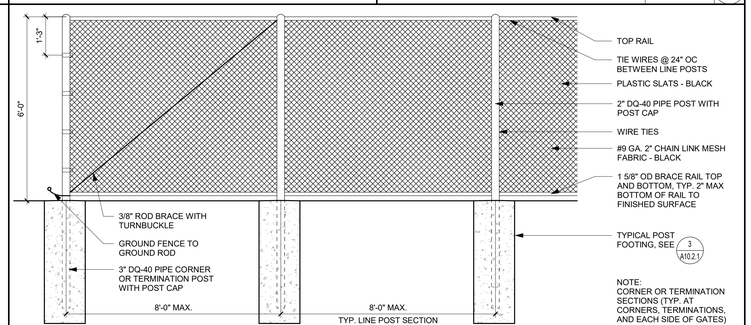

CHAIN LINK FENCE TYPICAL ELEVATION 1/2" = 1'-0" (4)

DSA STAMP

IDENTIFICATION STAMP
DIV. OF THE STATE ARCHITECT
APP: 02-122281 INC:
REVIEWED FOR
SS ☑ FLS ☑ ACS ☑
DATE: 03/19/2024

STUDIO W ARCHITECTS

Studio W Architects
1930 H Street
Sacramento, California 95811
[T] 916.254.5600
www.StudioW-Architects.com

ARCHITECT	ENGINEER
LICENSED ARCHITECT BRIAN P. WHITMORE No. C 30345 Rev. 07/30/25 STATE OF CALIFORNIA DATE SIGNED: 03/14/2024	

GENERAL NOTES

1. This sheet is part of a set and is not to be used alone.
2. This sheet is not to be used for construction unless the architect's stamp and signature appear on the drawings and the status box indicated drawings have been released for construction.
3. These plans and prints thereof, as instruments of service, are owned by the architect and are for use on this project only. Reproduction and/or distribution without the prior written consent of the architect is forbidden.
4. Copyright Studio W Associates, Inc. 2023.

REVISION HISTORY

NO.	REMARKS	DATE

DRAWING STATUS

	DATE
◯ DSA PLAN CHECK	
◯ DSA BACK CHECK	
◯ BIDDING	
◯ CONSTRUCTION	

KEY PLAN

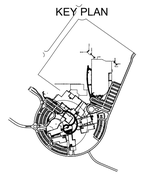

WASHINGTON UNIFIED SCHOOL DISTRICT
930 WESTACRE ROAD
WEST SACRAMENTO, CA 95691

PROJECT STATUS

WUSD RIVER CITY HIGH SCHOOL
ESSR III
1 RAIDER LANE
WEST SACRAMENTO, CA 95691

SITE DETAILS

Date	Project Number
03/14/2024	22047
Application Number	Drawing Number
02-122281	A10.2.1
Drawn / Author	Checked / Checker

PRINT DATE: 3/18/2024 12:27:38 PM
FILE PATH: BIM 360:/22047 Washington USD River City HS/22047-WUSD River City High School-Site-A21.rvt

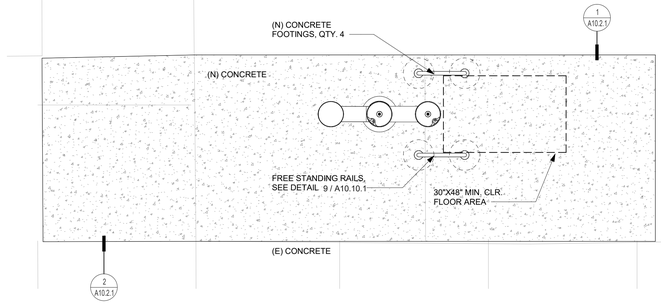

ENLARGED FREESTANDING DRINKING FOUNTAIN AT BASEBALL FIELD 1/2" = 1'-0" 21

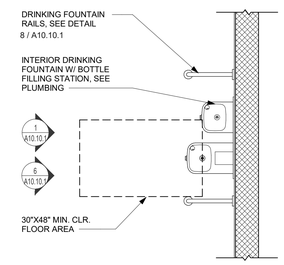

ENLARGED HI-LO INTERIOR DRINKING FOUNTAIN PLAN 1/2" = 1'-0" 16

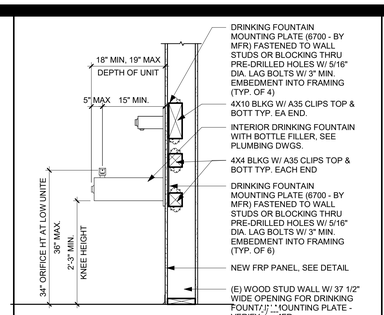

HI-LO INT. DRINKING FOUNTAIN SECTION AND CLEARANCES 3/4" = 1'-0" 11

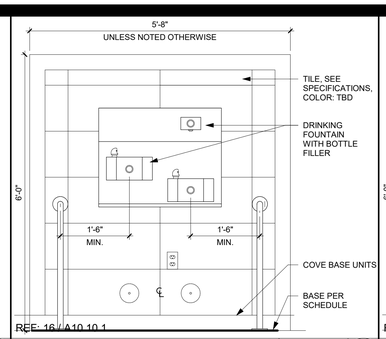

HI-LO INTERIOR DRINKING FOUNTAIN WITH BOTTTLE FILLER 3/4" = 1'-0" 6

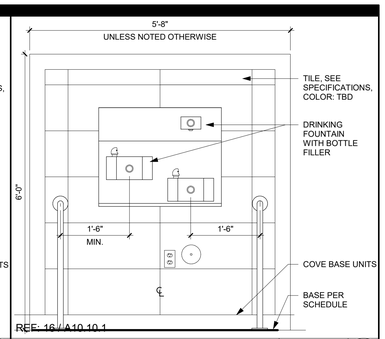

HI-LO INTERIOR DRINKING FOUNTAIN WITH BOTTLE FILLER 3/4" = 1'-0" 1

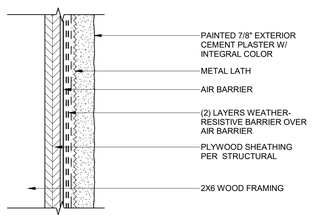

CEMENT PLASTER DETAIL 6" = 1'-0" 27

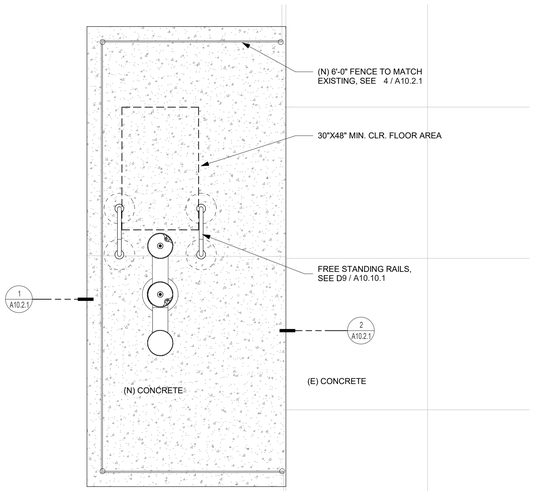

REF: 10 / A1.1

ENLARGED FREESTANDING DRINKING FOUNTAIN PLAN AT FOOTBALL FIELD/BLDG M 1/2" = 1'-0" 18

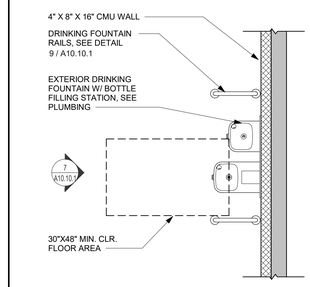

ENLARGED HI-LO EXTERIOR DRINKING FOUNTAIN PLAN 1/2" = 1'-0" 12

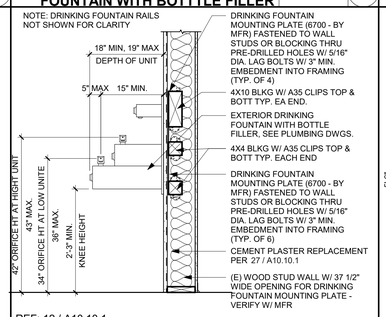

HI-LO EXTERIOR DRINKING FOUNTAIN AT PLASTER WALL 3/4" = 1'-0" 7

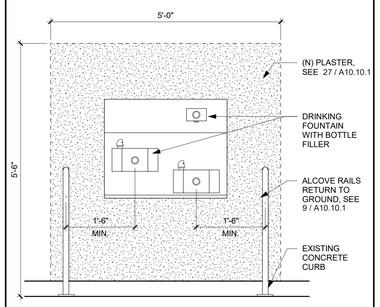

HI-LO EXTERIOR DRINKING FOUNTAIN WITH BOTTLE FILLER 3/4" = 1'-0" 2

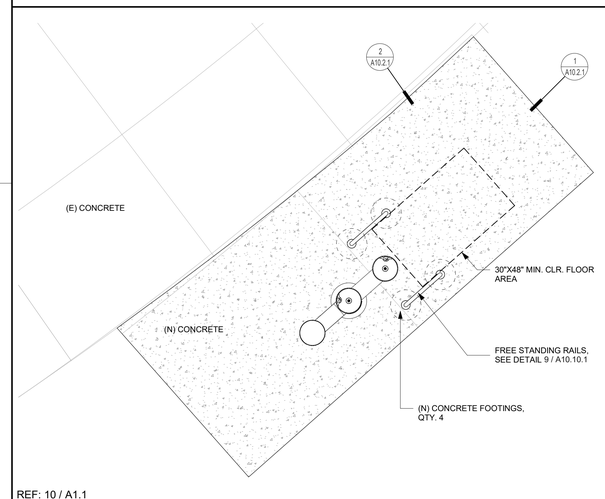

REF: 10 / A1.1

ENLARGED FREESTANDING DRINKING FOUNTAIN PLAN BY BUILDING D 1/2" = 1'-0" 19

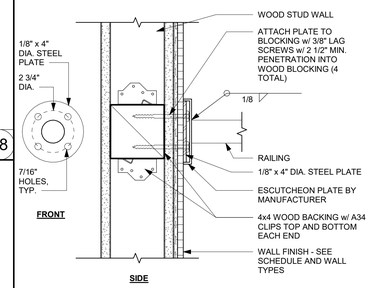

RAILING AT WALL 3" = 1'-0" 13

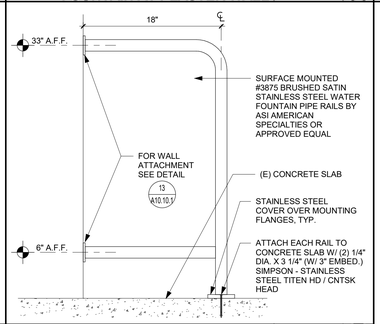

DRINKING FOUNTAIN RAILS 1 1/2" = 1'-0" 8

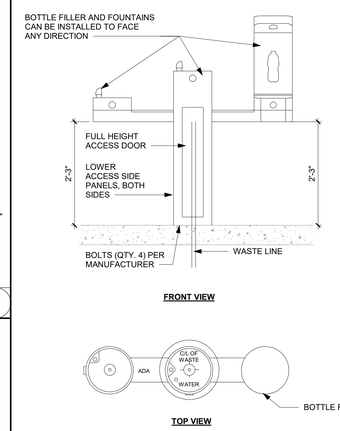

MODEL 3612

NOTES:

1. MEETS ADA REGULATIONS.
2. HAWS 3600 SERIES OUTDOOR FOUNTAINS ARE MODULAR AND CAN BE ASSEMBLED AND CONFIGURED MANY DIFFERENT WAYS. IT IS THE RESPONSIBILITY OF THE INSTALLER TO UNDERSTAND LOCAL, STATE AND FEDERAL REGULATIONS AS APPLICABLE WHEN INSTALLING THIS FOUNTAIN.
3. INSTALLATION TO BE COMPLETED IN ACCORDANCE WITH MANUFACTURER'S SPECIFICATIONS.
4. DESIGN SUBJECT TO CHANGE.
5. THIS DRAWING IS CONTEMPLATED FOR USE BY ARCHITECTS, ENGINEERS, CONTRACTOR, CONSULTANTS AND DESIGN PROFRESSIONALS FOR PLANNING PURPOSES ONLY. THIS DRAWING MAY NOT BE USED FOR CONSTRUCTION.
6. ALL INFORMATION CONTAINED HEREINWAS CURRENT AT THE TIME OF DEVELOPMENT BUT MUST BE REVIEWED AND APPROVED BY THE PRODUCT MANUFACTURER TO BE CONSIDERED ACCURATE.

MDF OUTDOOR DRINKING FOUNTAIN AND BOTTLE FILLER 3/4" = 1'-0" 4

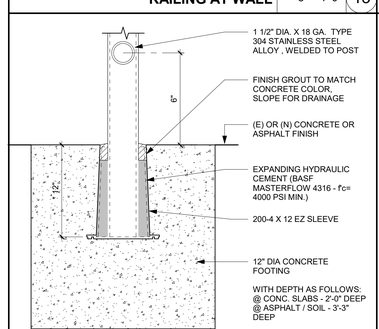

GUARDRAIL ATTACHMENT 3" = 1'-0" 14

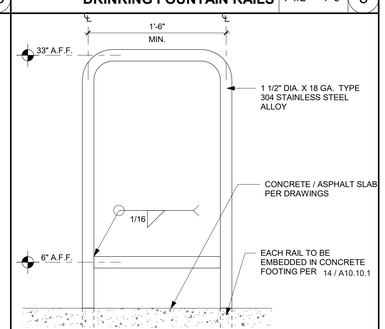

FREESTANDING RAILS 1 1/2" = 1'-0" 9

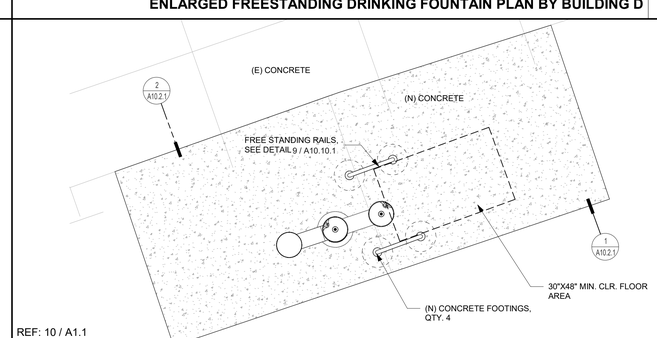

REF: 10 / A1.1

ENLARGED FREESTANDING DRINKING FOUNTAIN PLAN BY BUILDING G 1/2" = 1'-0" 20

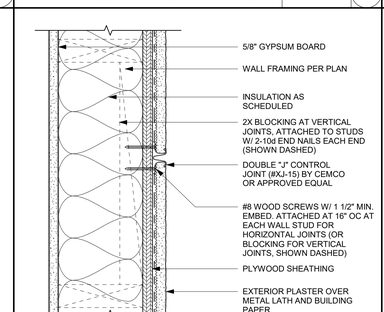

EXTERIOR CONTROL JOINT 3" = 1'-0" 15

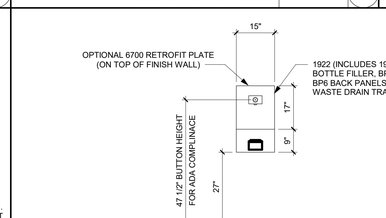

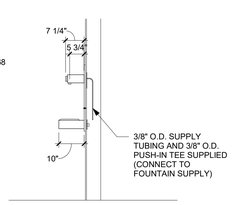

AMERICANS WITH DISABILITIES ACT (ADA) INSTALLATION HEIGHTS

1. SEE SEPARATE INSTALLATION DRAWINGS FOR MOUNTING PLATES AND BACK PANELS.
2. WHEN INSTALLING THIS UNIT, LOCAL, STATE OR FEDERAL CODES SHOULD BE ADHERED TO FOR INSTALLATION LOCATIONS, WASTE & SUPPLY REQUIREMENTS OTHER THAN SHOWN.

HAWS BOTTLE FILLER 1/2" = 1'-0" 5

DSA STAMP

IDENTIFICATION STAMP
DIV. OF THE STATE ARCHITECT
APP: 02-122281 INC:
REVIEWED FOR
SS ☑ FLS ☑ ACS ☑
DATE: 03/19/2024

STUDIO W ARCHITECTS

Studio W Architects
1930 H Street
Sacramento, California 95811
[T] 916.254.5600
www.StudioW-Architects.com

ARCHITECT	ENGINEER
LICENSED ARCHITECT BRYAN P. WHITMORE No. C 30345 Rev. 07/30/25 STATE OF CALIFORNIA DATE SIGNED: 03/14/2024	

GENERAL NOTES

1. This sheet is part of a set and is not to be used alone.
2. This sheet is not to be used for construction unless the architect's stamp and signature appear on the drawings and the status box indicated drawings have been released for construction.
3. These plans and prints thereof, as instruments of service, are owned by the architect and are for use on this project only. Reproduction and/or distribution without the prior written consent of the architect is forbidden.
4. Copyright Studio W Associates, Inc. 2023.

REVISION HISTORY

NO.	REMARKS	DATE

DRAWING STATUS

	DATE
DSA PLAN CHECK	
DSA BACK CHECK	
BIDDING	
CONSTRUCTION	

KEY PLAN

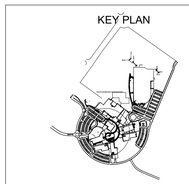

WASHINGTON UNIFIED SCHOOL DISTRICT
930 WESTACRE ROAD
WEST SACRAMENTO, CA 95691

PROJECT STATUS

WUSD RIVER CITY HIGH SCHOOL
ESSR III
1 RAIDER LANE
WEST SACRAMENTO, CA 95691

SPECIALTIES

Date	Project Number
03/14/2024	22047
Application Number	Drawing Number
02-122281	A10.10.1
Drawn / Author	Checked / Checker

PRINT DATE: 3/18/2024 1:05:09 PM
FILE PATH: BIM 360://22047 Washington USD River City HS/22047-WUSD River City High School-Site-A21.rvt

PLUMBING LEGEND

SYMBOL	ABBREVIATION	DESCRIPTION
	S	SEWER PIPE
OW	OW	OILY WASTE PIPE
GW	GW	GREASE WASTE PIPE
PW	PW	PUMPED (FORCED) WASTE PIPE
IW	IW	INDIRECT WASTE PIPE
	V	VENT PIPE
	CW	COLD WATER PIPE
ICW	ICW	INDUSTRIAL COLD WATER PIPE
SCW	SCW	SOFT COLD WATER PIPE
	HW	HOT WATER PIPE
IHW	IHW	INDUSTRIAL HOT WATER PIPE
	HWR	HOT WATER RETURN PIPE
140	140	140°F HOT WATER PIPE
R	R	RECLAIMED WATER PIPE
G	G	LOW PRESSURE NATURAL GAS PIPE
MPG	MPG	MEDIUM PRESSURE NATURAL GAS PIPE
HPG	HPG	HIGH PRESSURE NATURAL GAS PIPE
LPG	LPG	LIQUIFIED PETROLEUM GAS PIPE
CD	CD	CONDENSATE DRAIN PIPE
SCD	SCD	SECONDARY CONDENSATE DRAIN PIPE
PCD	PCD	PUMPED CONDENSATE DRAIN PIPE
RD	RD	ROOF DRAIN PIPE
ORD	ORD	OVERFLOW ROOF DRAIN PIPE
CA	CA	COMPRESSED AIR PIPE
	FCO	FLOOR CLEAN OUT
	GCO	GRADE CLEAN OUT
	WCO	WALL CLEAN OUT
	FC	FLEXIBLE CONNECTION
	SOV	SHUT OFF VALVE
	GC	GAS COCK
	CV	CHECK VALVE
	BV	BALL VALVE
	PRV	PRESSURE REDUCING VALVE
	BLV	BALANCING VALVE
PTR	PTR	PRESSURE AND TEMPERATURE RELIEF VALVE
	U	UNION
		CAPPED PIPE
	CONT	CONTINUED OR CONTINUATION
TP	TP	TRAP PRIMER LINE
	WHA	WATER HAMMER ARRESTOR
	RPBP	REDUCED PRESSURE BACKFLOW PREVENTER
	HB	HOSE BIBB
		PIPE DOWN OR DROP
		PIPE UP OR RISE
		VALVE ON DROP
		VALVE ON RISE
	T	THERMOMETER
	AS	AQUASTAT
	P.O.D.	POINT OF DISCONNECT
	POC	POINT OF CONNECTION
	AD, FD	AREA DRAIN OR FLOOR DRAIN
	FS, RR	FLOOR SINK OR ROOF RECEPTOR
	VTR	VENT THROUGH ROOF
	DEMO	DEMOLITION OR DEMOLISH
	RELO	RELOCATE
	CIRC PUMP	CIRCULATING PUMP
ø	DIA, DIAM	DIAMETER

ABBREVIATION	DESCRIPTION
ABV	ABOVE
A/C	ABOVE CEILING
AGA	AMERICAN GAS ASSOCIATION
ANSI	AMERICAN NATIONAL STANDARD INSTITUTE
ASME	AMERICAN SOCIETY FOR MECHANICAL ENGINEERS
ASSE	AMERICAN SOCIETY FOR SANITARY ENGINEERS
ASTM	AMERICAN SOCIETY FOR TESTING AND MATERIALS
ADA	AMERICANS WITH DISABILITIES ACT
AFF	ABOVE FINISHED FLOOR
AFG	ABOVE FINISHED GRADE
A/G	ABOVE GRADE
AP	ACCESS PANEL
ARCH	ARCHITECT OR ARCHITECTURAL
BT	BATH TUB
BEL	BELOW
B/F	BELOW FLOOR
B/G	BELOW GRADE
BOP	BOTTOM OF PIPE
B/S	BELOW SLAB
BTU	BRITISH THERMAL UNIT
BTUH	BRITISH THERMAL UNITS PER HOUR
CBC	CALIFORNIA BUILDING CODE
CEC	CALIFORNIA ELECTRICAL CODE
CFC	CALIFORNIA FIRE CODE
CMC	CALIFORNIA MECHANICAL CODE
CPC	CALIFORNIA PLUMBING CODE
CI	CAST IRON
CISPI	CAST IRON SOIL PIPE INSTITUTE
CLG	CEILING
CP	CIRCULATION PUMP
CL	CLARIFIER
CLR	CLEAR
CONC	CONCRETE
CONN	CONNECT OR CONNECTION
CONTR	CONTRACTOR
CFH	CUBIC FEET PER HOUR
CFM	CUBIC FEET PER MINUTE
°C	DEGREES CELSIUS
°F	DEGREES FAHRENHEIT
DIV	DIVISION
DWG(S)	DRAWING(S)
EA	EACH
(E)	EXISTING
ELEC	ELECTRICAL
ELEV	ELEVATION
ET	EXPANSION TANK
FF	FINISHED FLOOR
FPM	FEET PER MINUTE
FLR	FLOOR
FT	FEET OR FOOT
FU	FIXTURE UNIT
FOG	FAT, OIL, AND GREASE
GA	GAUGE
GALV	GALVANIZED
GPC	GALLONS PER CYCLE
GPF	GALLONS PER FLUSH
GPH	GALLONS PER HOUR
GPM	GALLONS PER MINUTE
GD	GARBAGE DISPOSAL
HD	HEAD
GI	GREASE INTERCEPTOR
HDR	HEADER
HR	HOUR
IM	ICE MAKER SUPPLY BOX
IES	ILLUMINATING ENGINEERS SOCIETY
IND	INDIRECT
IAPMO	INTERNATIONAL ASSOCIATION OF PLUMBERS AND MECHANICAL OFFICIALS
IBC	INTERNATIONAL BUILDING CODE
IMC	INTERNATIONAL MECHANICAL CODE
IPC	INTERNATIONAL PLUMBING CODE
INV	INVERT
IE	INVERT ELEVATION
KEC	KITCHEN EQUIPMENT CONTRACTOR
KG	KILOGRAMS
KPQ	KILOPASCALS
KS	KITCHEN SINK
LS	LAUNDRY SINK
L, LAV	LAVATORY
L/S	LITERS PER SECOND
LPF	LITERS PER FLUSH
MH	MANHOLE
MFR	MANUFACTURER
MSS	MANUFACTURERS STANDARDIZATION SOCIETY
MAX	MAXIMUM
MECH	MECHANICAL
MSA	MEDIUM PRESSURE GAS METER SET ASSEMBLY
MIL	0.001 INCH
mm	MILLIMETER
MIN	MINIMUM
MS	MOP SINK
MTD	MOUNTED
NSF	NATIONAL SANITATION FOUNDATION
NPSH	NET POSITIVE SUCTION HEAD
NOM	NOMINAL
NIC	NOT IN CONTRACT
NTS	NOT TO SCALE
NO	NUMBER
PLBG	PLUMBING
PDI	PLUMBING AND DRAINAGE INSTITUTE
PE	POLYETHYLENE
LBS	POUNDS
PSIG	POUNDS PER SQUARE INCH GAUGE
PD	PRESSURE DROP
QTY	QUANTITY
REQ'D	REQUIRED
RI	ROUGH-IN
SCH	SCHEDULE
SH	SHOWER
SOV	SHUT-OFF VALVE
SPEC	SPECIFICATION
SF	SQUARE FEET
SS	STAINLESS STEEL
STRUC	STRUCTURAL
TEMP	TEMPERATURE
MBH	THOUSANDS OF BRITISH THERMAL UNITS PER HOUR
THRU	THROUGH
TDH	TOTAL DEVELOPED HEAD
TDL	TOTAL DEVELOPED LENGTH
TEL	TOTAL EQUIVALENT LENGTH
TYP	TYPICAL
UNO	UNLESS NOTED OTHERWISE
UL	UNDERWRITERS LABORATORIES
UBC	UNIFORM BUILDING CODE
UMC	UNIFORM MECHANICAL CODE
UPC	UNIFORM PLUMBING CODE
UR	URINAL
VCP	VITRIFIED CLAY PIPE
V/PH/Hz	VOLTS/PHASE/HERTZ
WB, WSB	WASHING MACHINE SUPPLY BOX
WC	WATER CLOSET
WHA	WATER HAMMER ARRESTOR
WH	WATER HEATER
YB	YARD BOX

PLUMBING GENERAL NOTES:

1. THESE DOCUMENTS MAY NOT BE USED FOR ANY REPRODUCTION, BIDDING, OR CONSTRUCTION UNLESS AUTHORIZED, IN WRITING, BY SALAS O'BRIEN AND THE ENGINEER OF RECORD RESPONSIBLE FOR THEIR PREPARATION.
2. CONTRACTOR SHALL FIELD VERIFY THE LOCATIONS OF ALL EXISTING UTILITY PIPES PRIOR TO START OF WORK. NECESSARY ADJUSTMENTS TO THE PLUMBING LAYOUT SHALL BE DONE AT NO EXTRA COST.
3. CONTRACTOR SHALL NOTIFY ALL LOCAL UTILITY COMPANIES INCLUDING BUT NOT LIMITED TO THE GAS COMPANY, ELECTRIC COMPANY, TELEPHONE COMPANY, AND THE WATER DEPARTMENT, ABOUT THE EXTENT OF PLUMBING WORK. ALL EXCAVATION WORK SHALL BE APPROVED BY ALL UTILITY COMPANIES TO ASSURE PREVENTION OF INTERRUPTION OF EXISTING SERVICES PRIOR TO START OF WORK.
4. ALL PLUMBING WORK SHALL MEET OR EXCEED THE REQUIREMENTS OF THE CALIFORNIA PLUMBING CODE, CALIFORNIA BUILDING CODE, CALIFORNIA MECHANICAL CODE, CALIFORNIA ADMINISTRATIVE CODE. TITLE 24, AMERICANS WITH DISABILITIES ACT (ADA), NATIONAL FIRE PROTECTION ASSOCIATION (NFPA), THE LOCAL CITY AND COUNTY CODES, AND ALL OTHER CODES HAVING JURISDICTION. IN CASE OF CONFLICT, THE MORE STRICT REGULATIONS SHALL GOVERN.
5. ALL PLUMBING WORK SHALL BE COORDINATED WITH THE WORKS OF OTHER TRADES PRIOR TO START OF WORK. NECESSARY ADJUSTMENTS SHALL BE MADE AT NO EXTRA COST.
6. FOR MINIMUM PIPE SIZE CONNECTIONS TO EACH PLUMBING FIXTURE SEE PLUMBING FIXTURE SCHEDULE. THESE VALUES ARE MINIMUM; LARGER CONNECTIONS MAY RESULT BASED ON THE DIFFERENT MANUFACTURER'S RECOMMENDATIONS.
7. MANUFACTURER'S NAMES AND MODEL NUMBERS SHOWN FOR PLUMBING FIXTURES AND EQUIPMENT ARE FOR REFERENCE ONLY. OTHER MANUFACTURERS WHICH CAN MEET THE DESIGN REQUIREMENTS OF THE PLUMBING SYSTEM MAY BE SUBSTITUTED UPON APPROVAL FROM THE ARCHITECT AND THE OWNER.
8. PROVIDE DIELECTRIC FITTINGS FOR DISSIMILAR METALS IN CONTACT.
9. PROVIDE HANGERS AND SUPPORTS FOR PIPING IN ACCORDANCE WITH THE RECOMMENDATIONS OF MSS SP-69-2003.
10. PROVIDE VALVES AT THE FOLLOWING LOCATIONS:
    A. WATER MAIN SHUT-OFF VALVE IN VALVE BOX.
    B. VALVE WITH HOSE CONNECTION ON DOWNSTREAM SIDE OF THE MAIN SHUT-OFF VALVE.
    C. SHUT-OFF VALVE ON EACH SUPPLY TO EACH FIXTURE AND EQUIPMENT ITEM NOT PROVIDED WITH CONTROL STOP OR OTHER AUXILIARY SHUT-OFF VALVE. INSTALL SHUT-OFF VALVES SO THAT STEMS EITHER ARE VERTICAL WITH HANDWHEELS OR OPERATORS ON TOP OR ARE HORIZONTAL AND SO THAT VALVES ARE EASILY ACCESSIBLE FOR OPERATION, SERVICE, REMOVAL AND REPLACEMENT.
11. PROVIDE SLEEVES FOR ALL PIPE AND TUBING PASSING THROUGH FLOORS, ROOFS, AND WALLS. PACK CAULK INTO THE SPACE AROUND THE PIPE OR TUBING. PROVIDE FLASHING FOR ALL PIPES EXTENDING THROUGH THE ROOF.
12. ALL VENT TERMINATIONS AT ROOF SHALL BE AT LEAST 10 FEET AWAY FROM OUTSIDE AIR INTAKES, OPERABLE WINDOWS, AND BUILDING OPENINGS.
13. FILL CRACKS BETWEEN FIXTURES AND WALL/FLOORS WITH SILICONE RUBBER SEALANT.
14. LOCATE, SIZE, AND INSTALL WATER HAMMER ARRESTERS IN ACCORDANCE WITH PLUMBING AND DRAINAGE INSTITUTE STANDARD NO. WH-201.
15. INSTALL FIXTURES IN ACCORDANCE WITH THE MANUFACTURER'S RECOMMENDATIONS AND ALL APPLICABLE CODES. SECURE FLOOR OUTLET OF FLOOR-MOUNTED FIXTURES TO DRAINAGE CONNECTIONS AND FLOOR IN A RIGID MANNER. RIGIDLY SUPPORT WALL-HUNG FIXTURES BY MEANS OF METAL SUPPORTING MEMBERS. USE CHROMIUM-PLATED BRASS BOLTS, NUTS, AND WASHERS WHERE EXPOSED. ALL CONNECTIONS SHALL BE MADE GAS-TIGHT AND WATER-TIGHT. USE OF PUTTY AND PLASTICS FOR GASKETS WILL NOT BE PERMITTED.
16. PROVIDE ALL FIXTURE COMPONENTS AS INDICATED ON DRAWINGS. PROVIDE ADDITIONAL COMPONENTS AS PER MANUFACTURER'S RECOMMENDATIONS FOR PROPER OPERATION OF THE FIXTURES.
17. PROVIDE EACH PLUMBING FIXTURE (INCLUDING HOSE BIBBS) WITH AN INDIVIDUAL STOP OR COMPRESSION VALVE OF POLISHED CHROME-PLATED LOOSE KEY TYPE.
18. WHERE DEPTHS OR INVERTS ELEVATIONS ARE NOT INDICATED, PROVIDE MINIMUM COVERAGE (ABOVE TOP OF PIPES) AS FOLLOWS:
    A. ANY PIPING UNDER SLAB (TOP OF PIPE TO UNDERSIDE OF SLAB): 18 INCHES.
    B. CAST IRON AND COPPER PIPES IN OTHER LOCATIONS: 18 INCHES.
    C. EXCAVATE TO UNDISTURBED EARTH: CUT LEVEL AND FORM TRUE. REMOVE DEBRIS, RUBBISH AND SOFT MATERIAL (SUCH AS MUD). WHERE ROCK IS ENCOUNTERED, UNDERCUT TRENCHES 6-INCHES AND FILL WITH WELL TAMPED NEUTRAL SAND AND PEA GRAVEL TO PROPER PIPE ELEVATION. DURING EXCAVATION FREE OF STANDING WATER. UNDERCUT TRENCH 6-INCHES AND INSTALL PIPING IN A 6-INCH NEUTRAL SAND ENVELOPE.
19. BACKFILL TO A POINT 12-INCHES ABOVE TOP OF PIPING WITH EARTH (EXCAVATED MATERIAL MAY BE USED) FREE OF CLAY, DEBRIS, RUBBISH, ROCKS, OR CLODS OVER 4-INCHES IN THE GREATEST DIMENSION. BACKFILL ABOVE 12-INCHES FROM TOP OF PIPING MAY BE WITH EXCAVATED MATERIAL. APPLY BACKFILL BY HAND IN 6-INCH DEEP LAYERS THE FULL WIDTH OF THE TRENCH. MOISTEN EACH LAYER (DO NOT FLOOD OR PUDDLE), AND HAND TAMP TO A MINIMUM 90 PERCENT COMPACTION BEFORE PROCEEDING WITH THE NEXT LAYER OF BACKFILL.
20. DO NOT EXCAVATE UNDER FOUNDATIONS OR FOOTINGS EXCEPT IN MANNER PERMITTED BY THE ARCHITECT. DO NOT BACKFILL UNTIL INSTALLED PIPING HAS BEEN SUCCESSFULLY TESTED.
21. VERIFICATION OF WATER AGENCY APPROVAL SHALL BE SUBMITTED TO THE BUILDING AND SAFETY DIVISION PRIOR TO ISSUANCE OF A PLUMBING PERMIT FOR THIS PROJECT.
22. ALL PENETRATIONS THRU FIRE RATED ASSEMBLIES SHALL BE PACKED WITH APPROVED FIRE PROOFING. FOR LOCATIONS OF FIRE RATED ASSEMBLIES, SEE ARCHITECTURAL PLANS.
23. ROUTE ALL PIPES AS HIGH AS POSSIBLE IN EXPOSED LOCATIONS. COORDINATE ROUTING WITH ALL OTHER TRADES PRIOR TO START OF WORK.
24. NO SPRAY FOAM INSULATION SHALL BE APPLIED TO AREAS CONTAINING PEX PIPING.

GENERAL NOTES

1. ALL PLUMBING SYSTEM COMPONENTS SHALL MEET OR EXCEED THE REQUIREMENTS OF CURRENT CBC, CMC, CPC, NEC, NFPA, ASTM, ANSI, AND ALL LOCAL AND STATE CODE REQUIREMENTS. (SEE BELOW)
2. ALL PLUMBING EQUIPMENT LISTED IN OF THE 2022 CALIFORNIA CODE OF REGULATIONS (CCR), TITLE-24, PART 6, SECTION 110.3 ENERGY EFFICIENCY STANDARDS MUST BE CERTIFIED BY THE MANUFACTURER TO MEET OR EXCEED SPECIFICATIONS OR EFFICIENCIES ADOPTED BY THE CEC.
3. ALL INSULATING MATERIALS INSTALLED MUST BE CERTIFIED BY CALIFORNIA ENERGY COMMISSION TO MEET 2022 CALIFORNIA CODE OF REGULATIONS, TITLE-24, PART 6, ENERGY EFFICIENCY STANDARDS, SECTION 120.3 AND TABLE 4-15.
4. ALL INSULATION INSTALLED SHALL MEET THE FLAME SPREAD AND SMOKE DENSITY REQUIREMENTS OF 2022 CBC, PART 1, SECTION 720 AND 2022 CMC. SECTION 602.2.
5. ALL PIPING EXPOSED TO WEATHER SHALL BE METALLIC.
6. ALL FERROUS PIPING EXPOSED TO WEATHER SHALL BE GALVANIZED AND PAINTED.
7. ALL PIPES, FITTINGS AND FIXTURES USED TO CONVEY POTABLE WATER SHALL BE LEAD FREE IN COMPLIANCE WITH CPC SECTION 604.2.
8. ALL FIXTURES REQUIRED TO BE ACCESSIBLE SHALL BE INSTALLED AS PER THE LATEST REQUIREMENTS OF TITLE 24 AND ADA (AMERICANS WITH DISABILITIES ACT).
9. CROSS CONNECTION PROTECTION SHALL BE PROVIDED AT ALL POTABLE WATER SUPPLIED APPLIANCES AND EQUIPMENT (OTHER THAN THOSE LISTED IN INFORMATION BULLETIN 103).
10. ALL INSTALLATION OF PEX PIPE INSTALLED IN NEW CONSTRUCTION SHALL BE FLUSHED TWICE OVER A PERIOD OF AT LEAST ONE WEEK PER CPC SECTION 604.1.2. PEX.
    1) AT THE TIME OF FILL, EACH NEW PLUMBING FIXTURE SHALL HAVE A REMOVABLE TAG APPLIED STATING:
       a. THIS NEW PLUMBING SYSTEM SHALL BE FIRST FILLED AND FLUSHED ON __________(DATE) BY _________(NAME). THE STATE OF CALIFORNIA REQUIRES THAT THE SYSTEM BE FLUSHED AFTER STANDING AT LEAST ONE WEEK AFTER THE FILL DATE SPECIFIED ABOVE. IF THIS SYSTEM IS USED EARLIER THAN ONE WEEK AFTER THE FILL DATE ABOVE. IF THIS SYSTEM IS USED EARLIER THAN ONBE WEEK AFTER THE FILL DATE, THE WATER MUST BE ALLOWED TO RUN FOR AT LEAST TWO MINUTES PRIOR TO USE FOR HUMAN CONSUMPTION. THE TAG MAY NOT BE REMOVED PRIOR TO THE COMPLETION OF THE REQUIRED SECOND FLUSHING, EXCEPT BY BUILDING OWNER OR OCCUPANT.
    2) PRIOR TO ISSUING A BUILDING PERMIT TO INSTALL PEX PIPE, THE BUILDING OFFICIAL SHALL REQUIRE AS PART OF THE PERMITTING PROCESS THAT THE CONTRACTOR; OR THE APPROPRIATE PLUMBING SUBCONTRACTORS, PROVIDE WRITTEN CERTIFICATION THAT HE OR SHE WILL COMPLY WITH THE FLUSHING PROCEDURES SET FORTH BY CODE.
    3) THE BUILDING OFFICIAL SHALL NOT GIVE FINAL PERMIT APPROVAL FOR ANY PEX PLUMBING INSTALLATION UNLESS HE OR SHE FINDS THAT THE MATERIAL HAS BEEN INSTALLED IN COMPLIANCE WITH THE REQUIREMENTS OF THE CODE, INCLUDING THE REQUIREMENTS TO FLUSH AND TAG THE SYSTEMS.
    4) ANY CONTRACTOR OR SUBCONTRACTOR FOUND TO HAVE FAILED TO COMPLY WITH THE PEX FLUSHING REQUIREMENTS SHALL BE SUBJECT TO THE PENALTIES IN HEALTH AND SAFETY CODE, DIVISION 13, PART 1.5, CHAPTER 6 (SECTION 17995, et seq.).

APPLICABLE CODES

- 2022 CALIFORNIA ADMINISTRATIVE CODE (CAC), CCR PART 1, TITLE 24
- 2022 CALIFORNIA BUILDING CODE (CBC), CCR TITLE 24, PARTS 1 & 2 (BASED ON THE 2021 EDITION INTERNATIONAL BUILDING CODE, VOLS. 1 & 2)
- 2022 CALIFORNIA ELECTRICAL CODE (CEC), CCR TITLE 24, PART 3 (BASED ON THE 2020 EDITION NATIONAL ELECTRICAL CODE WITH CALIFORNIA AMENDMENTS)
- 2022 CALIFORNIA MECHANICAL CODE (CMC), CCR TITLE 24, PART 4, TITLE 24 CCR (BASED ON THE 2021 EDITION UNIFORM MECHANICAL CODE WITH CALIFORNIA AMENDMENTS)
- 2022 CALIFORNIA PLUMBING CODE (CPC), CCR TITLE 24, PART 5, (BASED ON THE 2021 EDITION UNIFORM PLUMBING CODE WITH CALIFORNIA AMENDMENTS)
- 2022 CALIFORNIA ENERGY CODE (CEC), CCR TITLE 24, PART 6, AND ASSOCIATED ADMINISTRATIVE REGULATION IN PART 1.
- 2022 CALIFORNIA FIRE CODE (CFC), CCR TITLE 24, PART 9 (BASED ON THE 2021 EDITION INTERNATIONAL FIRE CODE WITH CALIFORNIA AMENDMENTS)
- 2022 CALIFORNIA EXISTING BUILDING CODE (CEBC), CCR TITLE 24, PART 10, (BASED ON THE 2021 EDITION INTERNATIONAL EXISTING BUILDING CODE WITH CALIFORNIA AMENDMENTS)
- 2022 CALIFORNIA GREEN BUILDING STANDARDS CODE (CALGreen), CCR TITLE 24, PART 11
- 2022 CALIFORNIA REFERENCED STANDARDS CODE, CCR TITLE 24, PART 12
- TITLE 19 CCR, PUBLIC SAFETY, STATE FIRE MARSHAL REGULATIONS

PLUMBING PIPE MATERIAL SCHEDULE

SERVICE	LOCATION	PIPE MATERIAL	SLOPE
WATER	ABOVE GRADE	ASTM B88 TYPE "L" HARD DRAWN COPPER WITH WROUGHT COPPER FITTINGS.	1/32" PER 1'
	BELOW GRADE	ASTM B88 TYPE "K" HARD DRAWN COPPER, FACTORY INSULATED, WITH WROUGHT COPPER FITTINGS.	1/32" PER 1'
SEWER AND VENT	ABOVE GRADE	ASTM A888 SERVICE WEIGHT CAST IRON PIPE AND DWV FITTINGS SHALL CONFORM TO CPC AND BEAR THE COLLECTIVE TRADEMARK OF CISPI AND NSF.	1/4" PER 1'
	BELOW GRADE	ABS SCHEDULE 40 PIPE AND DWV FITTINGS SHALL CONFORM TO ASTM D2321-2000 AND CPC.	1/4" PER 1'

PLUMBING FIXTURE SCHEDULE

SYMBOL	FIXTURE	MIN. PIPE SIZE CW	HW	V	S	REMARKS
DF 1	DRINKING FOUNTAIN W/ BOTTLE FILLER	3/4"	--	--	2"	FREE STANDING GROUND MOUNTED OUTDOOR DRINKING FOUNTAIN HAWS MODEL 3612, VANDAL RESISTANT, ADA COMPLIANT PEDESTAL MOUNTED BOTTLE FILLER WITH 1 GPM FLOW AND HIGH-LOW DRINKING FOUNTAIN WITH HEAVY DUTY STAINLESS STEEL PEDESTAL WITH PUSH BUTTON OPERATED STAINLESS STEEL VALVE AND FLOW CONTROL. INSTALL WITH HOSE BIBB MODEL 3660, LOCKABLE HOSE BIBB ATTACHMENT.
DF 2	DRINKING FOUNTAIN W/ BOTTLE FILLER	3/4"	--	1-1/2"	2"	WALL MOUNTED EXTERIOR/INTERIOR HI LO DRINKING FOUNTAIN HAWS MODEL 1119-1920, VANDAL RESISTANT, ADA COMPLIANT WITH BOTTLE FILLER OF 1 GPM FLOW AND HIGH-LOW DRINKING FOUNTAINS WITH PUSH BUTTON OPERATED. INSTALL WITH WALL MOUNTING PLATE.
BF 1	BOTTLE FILLER	3/4"	--	1-1/2"	2"	WALL MOUNTED BOTTLE FILLER INDOOR/OUTDOOR HAWS MODEL 1922, ADA COMPLIANT,1 GPM FLOW, PUSH BUTTON OPERATED, WITH DRIP TRAY DRAIN, MODEL 6468. INSTALL WITH WALL MOUNTING PLATE.

DSA STAMP

IDENTIFICATION STAMP
DIV. OF THE STATE ARCHITECT
APP: 02-122281 INC:
REVIEWED FOR
SS ☑ FLS ☑ ACS ☑
DATE: 03/19/2024

STUDIO W ARCHITECTS

Studio W Architects
1930 H Street
Sacramento, California 95811
[T] 916.254.5600
www.StudioW-Architects.com

Salas O'Brien
3220 Executive Ridge, Suite 210
Vista, CA 92081
760.560.0100
02-26-24 #2022-05801
www.salasobrien.com
E-Mail
MD - PP -

ARCHITECT	ENGINEER
LICENSED ARCHITECT BRIAN P WHITMORE No. C 30345 Ren. 9/30/25 STATE OF CALIFORNIA	REGISTERED PROFESSIONAL ENGINEER DUSTY DURRANT No. M32811 Exp. 6/30/24 MECHANICAL STATE OF CALIFORNIA
DATE SIGNED: MM/DD/YYYY	

GENERAL NOTES

1. This sheet is part of a set and is not to be used alone.
2. This sheet is not to be used for construction unless the architect's stamp and signature appear on the drawings and the status box indicated drawings have been released for construction.
3. These plans and prints thereof, as instruments of service, are owned by the architect and are for use on this project only. Reproduction and/or distribution without the prior written consent of the architect is forbidden.
4. Copyright Studio W Associates, Inc. 2022.

REVISION HISTORY

NO.	REMARKS	DATE

DRAWING STATUS — DATE

- ○ DSA PLAN CHECK
- ○ DSA BACK CHECK
- ○ BIDDING
- ○ CONSTRUCTION

KEY PLAN

WASHINGTON UNIFIED SCHOOL DISTRICT
930 WESTACRE ROAD
WEST SACRAMENTO, CA 95691

PROJECT STATUS

WUSD RIVER CITY HIGH SCHOOL
ESSR III
1 RAIDER LANE
WEST SACRAMENTO, CA 95691

PLUMBING LEGEND AND GENERAL NOTES

Date	Project Number
MM/DD/YYYY	22047
Application Number	Drawing Number
XX-XXXXXX	P0.1
Drawn PP	Checked SO

PRINT DATE: 4/24/2023 12:32:04 PM
FILE PATH: 22047-WUSD River City High School-Site-A21_detached.rvt

PLUMBING SITE PLAN 1" = 100'-0" 01

GENERAL NOTES

A. CONTRACTOR SHALL FIELD VERIFY EXACT LOCATION OF ALL PIPING AND UTILITIES PRIOR TO START OF WORK. IN THE EVENT OF ANY DISCREPANCIES OR POTENTIAL CONFLICTS, NOTIFY THE ARCHITECT AND ENGINEER IN WRITING PRIOR TO START OF WORK.

B. ALL PIPING LOCATIONS ARE DIAGRAMMATIC. CONTRACTOR SHALL COORDINATE WITH ALL TRADES AND OWNER'S REPRESENTATIVE AND VERIFY EXACT ROUTING PRIOR TO START OF WORK.

C. VERIFY EXACT SIZE AND LOCATION OF ALL PLUMBING CONNECTIONS TO MECHANICAL EQUIPMENT PRIOR TO START OF WORK. IN NO CASE SHALL THE CONNECTION SIZE BE LARGER THAN THE BRANCH PIPING SIZE.

KEY NOTES

1. INSTALL NEW DRINKING FOUNTAIN WITH BOTTLE FILLER. CONNECT TO PLUMBING SERVICE OF THE REMOVED FIXTURE.
2. DISCHARGE 2" WASTE FROM DRINKING FOUNTAIN TO DRYWELL CONSTRUCTED PER CIVIL PLAN.
3. DRYWELL PER CIVIL PLAN.
4. CONNECT 3/4" CW TO 1" CW BELOW GRADE. REFER TO CIVIL PLANS FOR CONTINUATION.
5. INSTALL NEW BOTTLE FILLER. CONNECT TO PLUMBING SERVICE OF THE REMOVED FIXTURE.

DSA STAMP

IDENTIFICATION STAMP
DIV. OF THE STATE ARCHITECT
APP: 02-122281 INC:
REVIEWED FOR
SS ☑ FLS ☑ ACS ☑
DATE: 03/19/2024

STUDIO W ARCHITECTS

Studio W Architects
1930 H Street
Sacramento, California 95811
[T] 916.254.5600
www.StudioW-Architects.com

Salas O'Brien™
3220 Executive Ridge, Suite 210
Vista, CA 92081
760.560.0100
02-26-24 #2022-05801
www.salasobrien.com
E-Mail
MD - PP -

ARCHITECT	ENGINEER
LICENSED ARCHITECT BRIAN P WHITMORE No. C 30345 Ren. 9/30/25 STATE OF CALIFORNIA; DATE SIGNED: MM/DD/YYYY	REGISTERED PROFESSIONAL ENGINEER MISTY DURRER No. M32811 Exp. 6/30/24 MECHANICAL STATE OF CALIFORNIA

GENERAL NOTES

1. This sheet is part of a set and is not to be used alone.
2. This sheet is not to be used for construction unless the architect's stamp and signature appear on the drawings and the status box indicated drawings have been released for construction.
3. These plans and prints thereof, as instruments of service, are owned by the architect and are for use on this project only. Reproduction and/or distribution without the prior written consent of the architect is forbidden.
4. Copyright Studio W Associates, Inc. 2022.

REVISION HISTORY

NO.	REMARKS	DATE

DRAWING STATUS — DATE

- ○ DSA PLAN CHECK
- ○ DSA BACK CHECK
- ○ BIDDING
- ○ CONSTRUCTION

KEY PLAN

WASHINGTON UNIFIED SCHOOL DISTRICT
930 WESTACRE ROAD
WEST SACRAMENTO, CA 95691

PROJECT STATUS

WUSD RIVER CITY HIGH SCHOOL
ESSR III
1 RAIDER LANE
WEST SACRAMENTO, CA 95691

PLUMBING SITE PLAN

Date	Project Number
MM/DD/YYYY	22047
Application Number	Drawing Number
XX-XXXXXX	P1.1
Drawn: PP	Checked: SO

PRINT DATE: 4/24/2023 12:32:04 PM
FILE PATH: 22047-WUSD River City High School-Site-A21_detached.rvt

IDENTIFICATION STAMP
DIV. OF THE STATE ARCHITECT
APP: 02-122281 INC:
REVIEWED FOR
SS ☑ FLS ☑ ACS ☑
DATE: 03/19/2024

DESIGN CRITERIA			
BASE LOCATION LOCATED AT BOTTOM OF BASEPLATE/TOP OF FOOTING			
DESCRIPTION	DESIGN VALUES		
DEAD AND LIVE LOADS			
ROOF LIVE LOAD	20 PSF		
ROOF DEAD LOAD (SUPERIMPOSED ON FRAME)	5 PSF MAX		
ROOF PANEL DEAD LOAD	M=1.1 PSF, G = 1.2 PSF, S = 1.3 PSF		
COLLATERAL DEAD LOAD	M = 3.9 PSF, G = 3.8 PSF, S = 3.7 PSF		
ROOF LIVE LOAD			
ROOF LIVE LOAD, L_r	20 PSF		
ROOF SNOW LOAD			
GROUND SNOW LOAD, P_g	20 PSF		
RISK CATEGORY	II		
ROOF SNOW LOAD: SLOPED, P_s	20 PSF		
FOR SNOW LOAD CONDITIONS ONLY - SITE APPLICATION REVIEWER SHALL VERIFY THE STTRUCTURE SHALL BE LOCATED AT LEAST 20 FEET			
FROM ANY ADJACENT STRUCTURE FOR SNOW DRIFT.			
SNOW LOAD SLOPE FACTOR, C_s	1.0		
SNOW LOAD EXPOSURE FACTOR, C_e	1.0		
SNOW LOAD IMPORTANCE FACTOR, I_s	1.0		
THERMAL FACTOR, C_t	1.2		
LOWEST ANTICIPATED SERVICE TEMPERATURE	30°		
WIND DESIGN			
BASIC WIND SPEED (3 SECOND GUST), V_{ult}, V_{asd}	100 MPH, 78 MPH		
RISK CATEGORY	II		
EXPOSURE CATEGORY	C		
FACTORS: K_z, K_{zt}, K_d	0.85, 1.0, 0.85		
$q_h = 0.00256\ K_z\ K_{zt}\ K_d\ V^2$	18.50 PSF		
C_{NW} PER ASCE FIGURE 27.3-5 ROOF ANGLE 18.43 - CLEAR / OBSTRUCTED	CASE A (1.1 / -1.2) CASE B (0.01 / -0.69)		
C_{NL} PER ASCE FIGURE 27.3-5 ROOF ANGLE 18.43 - CLEAR / OBSTRUCTED	CASE A (-0.17 / -1.09) CASE B (-0.96 / -1.65)		
C_N PER ASCE FIGURE 27.3-7 PARALLEL TO RIDGE - CLEAR / OBSTRUCTED (< h)	CASE A (-0.8 / -1.2) CASE B (0.8 / 0.5)		
C_N PER ASCE FIGURE 27.3-7 PARALLEL TO RIDGE - CLEAR / OBSTRUCTED (> h, < 2h)	CASE A (-0.6 / -0.9) CASE B (0.5 / 0.5)		
C_N PER ASCE FIGURE 27.3-7 PARALLEL TO RIDGE - CLEAR / OBSTRUCTED (>2h)	CASE A (-0.3 / -0.6) CASE B (0.3 / 0.3)		
COMPONENTS & CLADDING - C_N (PRESSURE/SUCTION) CLEAR / OBSTRUCTED	ZONE 3 - (2.29 / -2.11) / (1.0 / -3.0)		
	ZONE 2 - (1.77 / -1.63) / (0.8 / -2.3)		
	ZONE 1 - (1.15 / -1.05) / (0.5 / -1.5)		
SEISMIC DESIGN			
LATERAL FORCE RESISTING SYSTEM	STEEL - ORDINARY CANTILEVER COLUMN		
ANALYSIS PROCEDURE	EQUIVALENT LATERAL FORCE		
SESIMIC IMORTANCE FACTOR, I_e	1.0		
SEISMIC SITE CLASS	D		
MCE_R SPECTRAL RESPONSE ACCELERATION @ 0.2 s, S_S	2.60		
MCE_R SPECTRAL RESPONSE ACCELERATION @ 0.2 s, S_1	0.90		
SHORT PERIOD SITE COEFFICIENT, F_a	1.20		
LONG PERIOD COEFFICIENT, F_v	1.70		
FUNDAMENTAL PERIOD OF THE STRUCTURE, T (WORST CASE FOR ALL STRUCTURES)	0.152 s		
DESIGN SPECTRAL RESPONSE ACCELERATION AT SHORT PERIOD, S_{DS}	2.08 ☐		
DESIGN SPECTRAL RESPONSE ACCELERATION AT SHORT PERIOD, S_{DS} - USED TO DETERMINE Cs (WITH CAP PER ASCE 7 12.8.1.3) SOIL PROPERTIES MAY NOT BE CLASSIFIED AS SITE CLASS E.	2.08 * 0.70 = 1.456 ☐		
DESIGN SPECTRAL RESPONSE ACCELERATION AT 1-s PERIODS, S_{D1}	1.02		
SEISMIC DESIGN CATEGORY	E		
SITE SPECFIC RESPONSE ANALYSIS NOT REQUIRED PER ASCE 7 11.4.8 EXCEPTION 2	T_s = 0.49 s	$T < 1.5 * T_s$	
RESPONSE MODIFICATION FACTOR, R	1.25		
OVERSTRENGTH FACTOR, Ω	1.25		
REDUNDANCY FACTOR, ρ	1.3		
HORIZONTAL OR VERTICAL IRREGULARITIES	NONE		
SEISMIC RESPONSE COEFFICIENT, C_s (20' WIDE, 30' WIDE, 40' WIDE)	1.16	1.00	1.00
DESIGN BASE SHEAR, V (20' WIDE, 30' WIDE, 40' WIDE)	12.73 PSF [ ]	13.41 PSF [ ]	14.65 PSF [ ]
ALLOWABLE SOIL BEARING FOR FOUNDATIONS	VARIES - SEE FOUNDATION CHARTS		
FLOOD DESIGN - DESIGN IS ASSUMED TO NOT BE IN FLOOD HAZARD AREA			
IF PROJECT IS LOCATED IN A FLOOD ZONE OTHERTHAN ZONE X, A LETTER STAMPED & SIGNED FROM A SOILS ENGINEER IS REQUIRED TO VALIDATE THE ALLOWABLE SOIL VALUES SPECIFIED.			

STRUCTURAL SEPARATION

ALL DEFLECTIONS SHOWN ALSO INCLUDE THE P-DELTA ROTATION PER IR PC-7

DEFLECTIONS ARE FOR (1) STRUCTURE

SOIL CLASSES PER CBC TABLE 1806A.2

MAXIMUM DRIFT δ_{max} SIDE COLUMNS	Soil Class 5	Soil Class 4	Soil Class 3
20' WIDE (8' EAVE HT, 10' EAVE HEIGHT, 12' EAVE HT) (INCHES)	[ ] 2.40	[ ] 2.55	[ ] 2.65
30' WIDE (8' EAVE HT, 10' EAVE HEIGHT, 12' EAVE HT) (INCHES)	[ ] 2.15	[ ] 2.30	[ ] 2.40
40' WIDE (8' EAVE , T, 10' EAVE HEIGHT, 12' EAVE HT) (INCHES)	[ ] 2.20	[ ] 2.20	[ ] 2.30
MINIMUM SEPARATION ($\delta_m = C_d\ \delta_{max}$) $C_d = 1.25$			
20' WIDE (8' EAVE HT, 10' EAVE HEIGHT, 12' EAVE HT) (INCHES)	[ ] 3.00	[ ] 3.19	[ ] 3.31
30' WIDE (8' EAVE HT, 10' EAVE HEIGHT, 12' EAVE HT) (INCHES)	[ ] 2.69	[ ] 2.88	[ ] 3.00
40' WIDE (8' EAVE HT, 10' EAVE HEIGHT, 12' EAVE HT) (INCHES)	[ ] 2.75	[ ] 2.75	[ ] 2.88

MAXIMUM DRIFT δ_{max} END COLUMNS	Soil Class 5	Soil Class 4	Soil Class 3
20' WIDE (8' EAVE HT, 10' EAVE HEIGHT, 12' EAVE HT) (INCHES)	[ ] 2.40	[ ] 2.55	[ ] 2.65
30' WIDE (8' EAVE HT, 10' EAVE HEIGHT, 12' EAVE HT) (INCHES)	[ ] 2.15	[ ] 2.30	[ ] 2.40
40' WIDE (8' EAVE HT, 10' EAVE HEIGHT, 12' EAVE HT) (INCHES)	[ ] 2.20	[ ] 2.20	[ ] 2.30
MINIMUM SEPARATION ($\delta_m = C_d\ \delta_{max}$) $C_d = 1.25$			
20' WIDE (8' EAVE HT, 10' EAVE HEIGHT, 12' EAVE HT) (INCHES)	[ ] 3.00	[ ] 3.19	[ ] 3.31
30' WIDE (8' EAVE HT, 10' EAVE HEIGHT, 12' EAVE HT) (INCHES)	[ ] 2.69	[ ] 2.88	[ ] 3.00
40' WIDE (8' EAVE HT, 10' EAVE HEIGHT, 12' EAVE HT) (INCHES)	[ ] 2.75	[ ] 2.75	[ ] 2.88

INSTRUCTIONS FOR ARCHITECTS SUBMITTING THESE PRE-CHECKED DRAWINGS TO DSA:

BEFORE SUBMITTING THESE PRE-CHECKED DRAWINGS FOR YOUR PROJECT, FOLLOW THE STEPS BELOW TO PROPERLY DEFINE THE APPROVED OPTIONS:

STEP 1: SELECT FRAME DIMENSIONS FOR YOUR PROJECT
- -HIP STRUCTURES UP TO 20' WIDE USE THE "RH 20" BASE FRAME
- -HIP STRUCTURES UP TO 30' WIDE USE THE "RH 30" BASE FRAME
- -HIP STRUCTURES UP TO 40' WIDE USE THE "RH 40" BASE FRAME
- -MAXIMUM WIDTH IS 40' (SEE "ARCHITECTURAL VIEWS" SHEET FOR REFERENCE)
- -THE 24', 44', 64', 84' AND 104' LENGTHS ARE SUGGESTED BECAUSE THEY ARE THE MOST COMMON (20' BAYS ARE THE MOST ECONOMICAL)
- -FRAME LENGTHS ASSUME 2' OVERHANGS (UNO BY ARCHITECT - 2' MAX DIMENSION)

STEP 1	FRAME DIMENSIONS					
		SUGGESTED				OTHER
	FRAME WIDTH	[ ] 20'	X] 30'	[ ] 40'		[ ] (40' MAX)
	FRAME LENGTH	[ ] 44'	X] 64'	[ ] 84'	[ ] 104'	[ ] (NO MAX)

STEP 2: SELECT ROOF DECK FOR YOUR PROJECT
- -"M" REPRESENTS McELROY METAL "MULTI-RIB" ROOF PANEL
- -"G" REPRESENTS McELROY METAL "MEGA-RIB" ROOF PANEL
- -"S" REPRESENTS McELROY METAL "MEDALLION-LOK" 16" STANDING SEAM ROOF PANEL

STEP 2	ROOF PANEL		
	ROOF PANEL TYPE	[ ] M [ ] G X] S	

STEP 3: IDENTIFY THE Ss ACCELERATION (g) FOR YOUR PROJECT
- -Ss VALUE DETERMINES THE REQUIRED SEISMIC DESIGN FORCES
- -Ss VAULE DEPENDS ON THE PROJECTS GEOGRAPHICAL LOCATION (VALUES RANGE FROM 0.00 TO 3.73)
  - -FIND Ss VALUES FOR YOUR PROJECT ON THE USGS WEBSITE (SEARCH INTERNET FOR "USGS SEISMIC DESIGN MAPS")

STEP 3	PROJECT SITE - Ss ACCELERATION (g)
	0.613

STEP 4: IDENTIFY THE Ss REGION FOR YOUR PROJECT
- -THE REGIONS ARE DEPENDANT ON THE Ss VALUE DETERMINED IN STEP 3
- -THE Ss REGION DICTATES THE MAXIMUM DEAD LOAD PERMITTED ON THE FRAME

STEP 4	Ss REGION			
			Ss REGIONS	MAX DEAD LOAD
	DESCRIPTION		0 < Ss <= 2.14	5 PSF
			~~2.14 < Ss <= 2.50~~	~~5 PSF~~
			~~2.50 < Ss <= 2.60~~	~~5 PSF~~

STEP 5: IDENTIFY THE ROOF DEAD LOAD FOR YOUR PROJECT
- - THE ROOF DECK DEAD LOAD WILL ALWAYS BE INCLUDED
- - THE COLLATERAL LOAD REPRESENTS ADDITIONAL LOAD THAT CAN BE SUPPORTED BY THE FRAME
- - BE SURE THE TOTAL ROOF DEAD LOAD FOR YOUR PROJECT IS LESS THAN OR EQUAL TO THE MAX DEAD LOAD SHOWN IN STEP 4 FOR YOUR Ss VALUE
- - Sds VALUE USED IN CALCULATION IS THE CAPPED Sds (SEE DESIGN CRITERIA)

STEP 5	TOTAL ROOF DEAD LOAD		
		DEAD LOAD	EXAMPLES
	ROOF DECK	1.3 PSF	M=1.1PSF; G=1.2PSF ;S=1.3PSF (SEE STEP 2)
	COLLATERAL	0 PSF	LIGHTNING,FIRE SUPPRESSION,SOLAR PANELS,ETC
	TOTAL	1.3 PSF	ADD ROOF DECK AND COLLATERAL LOADS (MAX 5 PSF)

STEP 6: IDENTIFY THE FOUNDATION REQUIREMENTS FOR YOUR PROJECT
- -IDENTIFY SOIL CLASS FOR PROJECT SITE PER SITE SPECIFIC SOIL CONDITIONS
- -USE THIS TO SELECT CORRECT FOUNDATION SIZE ON FOUNDATION SHEET

STEP 6	FOUNDATION REQUIREMENTS		
	X] GEOTECHNICAL REPORT NOT REQUIRED	[ ] GEOTECHNICAL REPORT REQUIRED	
	SOIL CLASS 5 (BEARING) 1500 PSF X]	SOIL CLASS 4 (BEARING) 2000 PSF [ ]	SOIL CLASS 3 (BEARING) 3000 PSF [ ]
	SOIL CLASS 5 (LATERAL BEARING) 200 PSF/FT	SOIL CLASS 5 (LATERAL BEARING) 300 PSF/FT	SOIL CLASS 5 (LATERAL BEARING) 400 PSF/FT
	COHESION 130 PSF	FRICTION COEFFICIENT 0.25	FRICTION COEFFICIENT 0.30

- SELECT AND VERIFY MINIMUM SEPARATION DISTANCE BETWEEN STRUCTURES

STEP 7: SELECT MISCELLANEOUS OPTIONS FOR YOUR PROJECT
- -MAXIMUM CLEAR HEIGHT IS 12'-0"; (SEE "ARCHITECTURAL VIEWS" SHEET FOR REFERENCE)
- -MARK UP PC DRAWINGS WITH SIZE AND LOCATION OF CUTOUTS BEFORE SUBMITTING TO DSA

STEP 7	MISCELLANEOUS		
		DESIGN OPTIONS	
	CLEAR HEIGHT	[ ] 8' [x] 10' [ ] 12' MAX	
	ELECTRICAL CUTOUTS	[ ] YES	X] NO
	GUTTERS	[X] YES	[ ] NO

STEP 8: SELECT APPLICABLE SHEET INDEX FOR YOUR PROJECT
- -REFERENCE THE BASE FRAME (STEP 1) AND THE ROOF PANEL TYPE (STEP 2)
- -IDENTIFY THE APPLICABLE SHEET INDEX

STEP 8	SHEET INDEX										
	BASE FRAME	RH 20			RH 30			RH 40			
	ROOF PANEL TYPE	M	G	S	M	G	S	M	G	S
	SELECT ONE	[ ]	[ ]	[ ]	[ ]	[ ]	X]	[ ]	[ ]	[ ]
	GENERAL NOTES	LS1.0 LS1.1	LS1.0 LS1.1	LS1.0 LS1.1	LS1.0 LS1.1	LS1.0 LS1.1	LS1.0 LS1.1	LS1.0	LS1.0	LS1.0
	FOUNDATION PLAN	LS2.0	LS2.0	LS2.0	LS3.0	LS3.0	LS3.0	LS4.0	LS4.0	LS4.0
	FRAMING PLAN	LS2.1	LS2.1	LS2.1	LS3.1	LS3.1	LS3.1	LS4.1	LS4.1	LS4.1
	FRAME CONNECTION DETAILS	LS2.1	LS2.1	LS2.1	LS3.1	LS3.1	LS3.1	LS4.2	LS4.2	LS4.2
	ROOFING LAYOUT & DETAILS	LS2.2	LS2.3	LS2.4	LS3.2	LS3.3	LS3.4	LS4.3	LS4.4	LS4.5
	DSA 103 EXAMPLE	LS1.2 LS1.3	LS1.2 LS1.3	LS1.2 LS1.3	LS1.2 LS1.3	LS1.2 LS1.3	LS1.2 LS1.3	LS1.2 LS1.3	LS1.2 LS1.3	LS1.2 LS1.3
	MISC DESIGN OPTIONS	LS5.0	LS5.0	LS5.0	LS5.0	LS5.0	LS5.0	LS5.0	LS5.0	LS5.0
	-									
	-									

STEP 9: INCLUDE APPLICABLE SHEETS WITH YOUR DSA SUBMITTAL
- -INCLUDE 'MISC DESIGN OPTIONS' SHEET FOR PROJECTS WITHOUT ELECTRICAL CUTOUTS OR GUTTERS

STEP 10: IDENTIFY PROJECT NAME AND LOCATION

PROJECT NAME:	SCHOOL DISTRICT:
RIVER CITY HIGH SCHOOL	WASHINGTON UNIFIED SCHOOL DISTRICT

STEP 11: CROSS OUT EXAMPLE 103 FORMS & INCORPORATE REQUIRED SPECIAL INSPECTIONS 103 FORMS THAT ARE PROJECT SPECIFIC

SITE SPECIFIC PARAMETERS

INSTRUCTIONS: DESIGN PROFESSIONAL SHALL CHECK THE APPROPRIATE SELECTION BOXES BELOW AND ENTER THE DESIGN PARAMETERS APPLICABLE TO THE SPECIFIC PROJECT SITE

SNOW
pg = 0 psf
Pf = 0 psf
Ce = 0 psf

WIND
V = 95 mph < XX mph
kzt = 1.0 ≤1
EXPOSURE: C X] D☐

SELECT ONE

SIESMIC
X] DESIGN BASED ON SITE CLASS D
NO GEOTECHNICAL INVESTIGATION REQUIRED
Ss = 0.613 Fa = 1.2

~~☐ DESIGN BASED ON SITE CLASS DETERMINED PER CHAPTER 20 OF ASCE 7-16 GEOTECHNICAL INVESTIGATION PROVIDED~~
~~SITE CLASS: C ☐ D☐ E☐~~
~~Ss = ____ Fa = ____ PER ASCE 7-16 SUPPL 3, TABLE 11.4-1~~

~~☐ DESIGN BASED ON SITE SPECIFIC GROUND MOTION HAZARD ANALYSIS PER CHAPTER 21 OF ASCE 7-16~~
~~SHORT-PERIOD DESIGN SPECTRAL RESPONSE PARAMETER, Sds, SHALL BE AS SPECIFIED IN GEOTECHNICAL INVESTIGATION~~
~~CGS APPROVAL REQUIRED~~
~~NOT ELEGIBLE FOR OTC REVIEW~~
~~SITE CLASS: C☐ D☐ E☐~~

Sds = Fa Ss = 0.613 (Sds=2.08 USED IN DESIGN, CONSERVATIVE

~~☐ SITE CLASS C or D: 0.7 x Sds* = 0.7 x ____ = ____ ≤ X.XX~~
~~☐ SITE CLASS E: Sds = ____ ≤ X.XX~~

Cs= 1.00 USED IN DESIGN
SIESMIC DESIGN CATEGORY D X] E ☐

*SITE SPECIFIC Sds VALUE BEFORE APPLYING REDUCTION ALLOWED BY ASCE 7 SECTION 12.8.1.3

ABBREVIATIONS:

ACI	AMERICAN CONCRETE INSTITUTE	MPH	MILES PER HOUR
AISC	AMERICAN INSTITUTE OF STEEL CONSTRUCTION	M	MULTI-RIB ROOF PANEL (MCELROY)
ASM	ASSEMBLY (INTERNAL REFERENCE)	NTS	NOT TO SCALE
ASTM	AMERICAN SOCIETY FOR TESTING AND MAT'LS	NO	NUMBER
AWS	AMERICAN WELDING SOCIETY	OC	ON CENTER
CBC	CALIFORNIA BUILDING CODE	OSHA	OCCUPATIONAL HEALTH AND SAFETY ADMIN
CJP	COMPLETE JOINT PENETRATION	PCF	POUNDS PER CUBIC FOOT
CLR	CLEAR	PJ	PRETENSIONED JOINT
DEG	DEGREE	PLCS	PLACES
DIA	DIAMETER	PLT	PLATE
DIM	DIMENSION	PSF	POUNDS PER SQUARE FOOT
DSA	DIVISION OF THE STATE ARCHITECT	PSI	POUNDS PER SQUARE INCH
EQ	EQUAL	QTY	QUANTITY
FT	FEET	REF	REFERENCE
GA	GAGE	SQ	SQUARE
IN	INCHES	SS	STANDING SEAM ROOF PANEL (MCELROY)
KSI	KIPS PER SQUARE INCH	TYP	TYPICAL
MAX	MAXIMUM	UNO	UNLESS NOTED OTHERWISE
MIN	MINIMUM	USGS	U.S. GEOLOGICAL SURVEY
MISC	MISCELLANEOUS	W/	WITH

ARCHITECTURAL REQUIREMENTS

DESCRIPTION	DESIGN VAULES
TYPE OF CONSTRUCTION	II-B
OCCUPANCY CLASSIFICATION	A-3
NUMBER OF STORIES	1
FIRE SPRINKLER SYSTEM	NOT BY ICON/WEIGHT NOT INCLUDED IN DESIGN
MOST COMMON RH20 MIN/MAX SQ.FT (SEE STEP 1)	480/2,080
MOST COMMON RH30 MIN/MAX SQ.FT (SEE STEP 1)	720/3,120
MOST COMMON RH40 MIN/MAX SQ.FT (SEE STEP 1)	960/4,160

AREA OVER 4000 SQ.FT REQUIRES GEOHAZARD REPORT
ALLOWABLE ARE FOR II-B / A-3 IS 9500 SQ.FT

RELATED BUILDING CODES AND STANDARDS

TITLE 24 CODES:

2022 CALIFORNIA ADMINISTRATIVE CODE (CAC)..................(PART 1, TITLE 24, CCR)
2022 CALIFORNIA BUILDING CODE (CBC),PART 2, TITLE 24 CCR
2022 CALIFORNIA ELECTRICAL CODE....................................(PART 3, TITLE 24, CCR)
2022 CALIFORNIA MECHANICAL CODE (CMC)........................(PART 4, TITLE 24, CCR)
2022 CALIFORNIA PLUMBING CODE (CPC)............................(PART 5, TITLE 24, CCR)
2022 CALIFORNIA ENERGY CODE..(PART 6, TITLE 24, CCR)
2022 CALIFORNIA FIRE CODE (CFC) ....(PART 9, TITLE 24, CCR)
2022 CALIFORNIA GREEN BUILDING STANDARDS CODE......(PART 11, TITLE 24, CCR)
2022 CALIFORNIA REFERENCE STANDARDS CODE.............(PART 12, TITLE 24, CCR)
TITLE 19 CCR, PUBLIC SAFETY, STATE FIRE MARSHAL REGULATIONS

REFERENCE CODE SECTIONS FOR APPLICABLE STANDARDS:
2022 CBC, CHAPTER 35
2022 CFC, CHAPTER 80

SCOPE OF WORK NARRATIVE

THESE DRAWINGS ILLUSTRATE THE FABRICATION AND INSTALLATION REQUIREMENTS FOR A FREE-STANDING PREFABRICATED STEEL SHADE STRUCTURE. THE ENTIRE STRUCTURAL SYSTEM IS COMPRISED OF HOLLOW STRUCTURAL STEEL MEMBERS SUPPORTED BY CONCRETE FOUNDATIONS. THE FLEXIBILITY INCLUDED HEREIN ALLOWS THE STRUCTURE TO COMPLY WITH A WIDE VARIETY OF PROJECT SITES AND LOADING REQUIREMENTS.

ICON STD	RH/DSA-PC
DRAWN BY	JD
DATE	7/25/2023
REV	
REV DATE	

JRMA
ARCHITECTS ENGINEERS
2700 SATURN ST I BREA, CA 92821
T. 714.524.1870 I F. 714.524.1875
WWW.JRMA.COM

REGISTERED PROFESSIONAL ENGINEER MICHAEL D. ... STRUCTURAL STATE OF CALIFORNIA
Oct 04, 2023

~~APPROVED
DIV. OF THE STATE ARCHITECT
APP: 04-122375 PC
REVIEWED FOR
SS ☑ FLS ☑ ACS ☑ CG ☐
DATE: 10/10/2023~~

GENERAL INFO

ICON Shelter Systems Inc
DISTINCTIVE STEEL SHELTERS
WWW.ICONSHELTERS.COM
COPYRIGHT 2004, ICON SHELTER SYSTEMS, INC.
1455 LINCOLN AVE
HOLLAND MI, 49423
616.396.0919
800.748.0985
616.396.0944 FX

PRE-CHECK (PC) DOCUMENT
Code: 2022 CBC
A separate project application for construction is required.

LS1.0

PRINTED ON :

IDENTIFICATION STAMP
DIV. OF THE STATE ARCHITECT
APP: 02-122281 INC:
REVIEWED FOR
SS ☑ FLS ☑ ACS ☑
DATE: 03/19/2024

GENERAL:

1. GENERAL NOTES AND TYPICAL DETAILS SHALL APPLY TO ALL PARTS OF THE JOB EXCEPT WHERE THEY MAY CONFLICT WITH DETAILS AND NOTES ON OTHER SHEETS. WHERE CONDITIONS ARE NOT SPECIFICALLY INDICATED BUT ARE OF SIMILAR CHARACTER TO DETAILS SHOWN, SIMILAR DETAILS OF CONSTRUCTION SHALL BE USED SUBJECT TO REVIEW BY THE STRUCTURAL ENGINEER FOR THIS PROJECT.
2. WORK SHALL CONFORM TO THE REQUIREMENTS, AS AMENDED TO DATE, OF THE LATEST ADOPTED EDITION OF THE CBC, C.A.C. TITLE 24, AND ALL STATE AND FEDERAL REGULATIONS.
3. OMISSIONS OR CONFLICTS BETWEEN THE VARIOUS ELEMENTS OF THE WORKING DRAWINGS AND/OR SPECIFICATIONS SHALL BE BROUGHT TO THE ATTENTION OF THE STRUCTURAL ENGINEER FOR THIS PROJECT PRIOR TO PROCEEDING WITH ANY WORK INVOLVED.
4. THE CONTRACTOR SHALL BE RESPONSIBLE FOR COORDINATING THE WORK OF ALL TRADES AND SHALL CHECK ALL DIMENSIONS, ALL DISCREPANCIES SHALL BE CALLED TO THE ATTENTION OF THE STRUCTURAL ENGINEER FOR THIS PROJECT AND BE RESOLVED BEFORE PROCEEDING WITH THE WORK.
5. THESE CONSTRUCTION DRAWINGS AND SPECIFICATIONS REPRESENT THE FINISHED STRUCTURE AND DO NOT INDICATE THE METHOD OF CONSTRUCTION. THE CONTRACTOR SHALL SUPERVISE AND DIRECT THE WORK AND SHALL BE SOLELY RESPONSIBLE FOR CONSTRUCTION MEANS, METHODS, TECHNIQUES, SEQUENCES AND PROCEDURES, INCLUDING, BUT NOT LIMITED TO, BRACING, TEMPORARY SUPPORTS, AND SHORING. OBSERVATION VISIT TO THE SITE BY FIELD REPRESENTATIVES OF THE ARCHITECT/ENGINEER SHALL NOT INCLUDE INSPECTIONS OF THE PROTECTIVE MEASURES OR THE CONSTRUCTION PROCEDURES. ANY SUPPORT SERVICES PERFORMED BY THE ARCHITECT/ENGINEER DURING THE CONSTRUCTION SHALL BE DISTINGUISHED FROM CONSTRUCTION AND DETAILED INSPECTION SERVICES WHICH ARE FURNISHED BY OTHERS. THESE SUPPORT SERVICES PERFORMED BY THE ARCHITECT/ENGINEER, WHETHER OF MATERIAL OR WORK, ARE FOR THE PURPOSE OF ASSISTING IN QUALITY CONTROL AND IN ACHIEVING CONFORMANCE WITH CONTRACT DOCUMENTS, BUT DO NOT GUARANTEE CONSTRUCTION.
6. ASTM DESIGNATIONS AND ALL STANDARDS REFER TO THE LATEST AMENDMENTS, EXCEPT AS AMENDED BY CBC CHAPTER 35.
7. CONFORM TO APPLICABLE CAL/OSHA CONSTRUCTION SAFETY REGULATIONS FOR ALL WORK PERFORMED DURING CONSTRUCTION. JOB SITE SAFETY IS STRICTLY THE RESPONSIBILITY OF THE CONTRACTOR AND NOT THE ARCHITECT/ENGINEER OR OWNER.
8. THE ENGINEER AND THEIR CONSULTANTS SHALL HAVE NO RESPONSIBILITY FOR THE DISCOVERY, HANDLING, REMOVAL OR DISPOSAL OF HAZARDOUS MATERIALS AT THE PROJECT SITE, INCLUDING BUT NOT LIMITED TO ASBESTOS, ASBESTOS PRODUCTS, POLYCHLORINATED BIPHENYL (PCB) OR OTHER TOXIC SUBSTANCES.
9. SHOULD ANY CONDITIONS DEVELOP NOT COVERED BY THE CONTRACT DOCUMENTS, OR IF A CHANGE IN THE SCOPE OF WORK IS PROPOSED, A CONSTRUCTION CHANGE DOCUMENT DETAILING AND SPECIFYING THE REQUIRED CHANGE(S) SHALL BE SUBMITTED TO AND APPROVED BY DSA BEFORE PROCEEDING WITH THE WORK.
10. THE SCHOOL DISTRICT INSPECTOR ON RECORD SHALL INSPECT AND APPROVE THE ERECTED FRAME PRIOR TO ROOF INSTALLATION.
11. SEE REQUIREMENTS FOR LOCATION IN ANY FIRE HAZARD SEVERITY ZONE FOR WILDLAND URBAN INTERFACE AREAS (WUI) AS SPECIFIED IN THE APPLICABLE VERSION OF THE CALIFORNIA BUILDING CODE. PROVIDE PROTECTION AND DETAILS OF ALL AREAS COMPLYING WITH THE WUI REQUIREMENTS.
12. LOCATING THIS STRUCTURE CLOSER THAN 20 FEET TO OTHER STRUCTURES MAY AFFECT THE ALLOWABLE AREA FOR THE EXISTING CONSTRUCTION PER THE APPLICABLE VERSION OF THE CALIFORNIA BUILDING CODE.
13. VIEWS AND DETAILS ARE NOT DRAWN TO SCALE (UNLESS NOTED OTHERWISE). DO NOT SCALE THESE DRAWINGS.

STRUCTURAL AND MISCELLANEOUS STEEL:

1. ALL STRUCTURAL STEEL SHALL BE DETAILED, FABRICATED AND ERECTED IN ACCORDANCE WITH THE AMERICAN INSTITUE OF STEEL CONSTRUCTION (AISC) SPECIFICATION MANUAL REFERENCED BY THE LATEST EDITION OF THE CALIFORNIA BUILDING CODE.
2. PIPE SECTIONS SHALL CONFORM TO ASTM A53, Fy = 35 KSI, GRADE B OR A501 UNLESS NOTED OTHERWISE.
3. STRUCTURAL TUBING (HSS SHAPES) SHALL CONFORM TO ASTM A-500, GRADE B (OR C), Fy = 46 KSI. MIN.
4. IF MATERIAL AVAILABILITY IS LIMITED, MEMBER THICKNESS CAN BE INCREASED BEYOND WHAT IS SHOWN IN THESE DRAWINGS (MAXIMUM INCREASE OF 1/8").
5. ALL CHANNELS, ANGLES, AND MISC. STEEL SHALL CONFORM TO ASTM A-36, Fy = 36 KSI.
6. ALL PLATE STEEL SHALL CONFORM TO ASTM A-572, Fy= 50 KSI.
7. ALL COLD FORM STEEL SHALL CONFORM TO ASTM A-653, CS = TYPE B, Fy = 50 KSI Fu = 65 KSI
8. STRUCTURAL STEEL AND DECK SHALL BE IDENTIFIED FOR CONFORMITY PER CBC 2202A.1.
9. ALL ROOF DECKS SHALL HAVE KYNAR 500 METAL COATING.
10. ALL ROOF DECKS SHALL CONFORM TO ASTM A-792, Fy = 50 KSI.
11. ALL BASE CONNECTIONS ARE A PART OF THE LATERAL FORCE RESISTING SYSTEM

NOTICE OF DISCLAIMER FOR STRUCTURAL ENGINEERING RESPONSIBILITY

1. PER TITLE 24, PART 1, SECTION 4-316(e) OF THE CALIFORNIA CODE OF REGULATIONS, THIS NOTICE SHALL BE GIVEN TO DSA PRIOR TO THE APPROVAL OF PLANS AND SPECIFICATIONS.
2. FOR THE SITE SPECIFIC PROJECT, J. R. MILLER & ASSOCIATES IS NOT THE DESIGN PROFESSIONAL IN GENERAL RESPONSIBLE CHARGE.
3. FOR THE SITE SPECIFIC PROJECT, J.R. MILLER & ASSOCIATES' RESPONSIBILITY IS LIMITED TO THE PREPARATION OF THE PLANS AND SPECIFICATIONS FOR THE SHELTERS OF THIS PC ONLY.
4. STRUCTURAL OBSERVATION OF CONSTRUCTION IS SPECIFICALLY EXCLUDED FROM J.R. MILLER & ASSOCIATES' RESPONSIBILITY FOR THE SITE SPECIFIC PROJECT.
5. ALL CONSTRUCTION ACTIVITIES RELATED TO STRUCTURAL ENGINEERING SHALL BE DELEGATED TO A QUALIFIED ENGINEER BY THE DESIGN PROFESSIONAL IN GENERAL RESPONSIBLE CHARGE. THESE ACTIVITIES INCLUDE, BUT ARE NOT LIMITED TO, STRUCTURAL OBSERVATION OF CONSTRUCTION, REVIEW OF INSPECTION REPORTS, AND SIGNING OFF OF THE VERIFIED REPORT FOR COMPLETED WORK.
6. J.R. MILLER & ASSOCIATES WILL BE RESPONSIBLE FOR RESPONDING TO QUESTIONS PERTAINING TO THE PLANS AND SPECIFICATIONS FOR THE SHELTERS OF THIS PC WHICH ARISE DURING PLAN REVIEW AND CONSTRUCTION.

CONSTRUCTION NOTES

1. A DSA-CERTIFIED CLASS 3 (MINIMUM) PROJECT INSPECTOR IS REQUIRED FOR THIS PROJECT.
2. CHANGES TO THE APPROVED DRAWINGS AND SPECIFICATIONS SHALL BE MADE BY ADDENDA OR CONSTRUCTION CHANGE DOCUMENT (CCD) APPROVED BY DSA, AS REQUIRED BY SECTION 4-338, PART 1, TITLE 24, CCR.
3. A "DSA CERTIFIED" PROJECT INSPECTOR EMPLOYED BY THE DISTRICT (OWNER) AND APPROVED BY DSA SHALL PROVIDE CONTINUOUS INSPECTION OF WORK, THE DUTIES OF THE INSPECTOR ARE DEFINED IN SECTION 4-342, PART 1, TITLE 24, CCR.
4. A DSA ACCEPTED TESTING LABORATORY DIRECTLY EMPLOYED BY THE DISTRICT (OWNER) SHALL CONDUCT ALL THE REQUIRED TESTS AND INSPECTIONS FOR THE PROJECT.
5. THE INTENT OF THESE DRAWINGS AND SPECIFICATIONS ARE THAT ALL THE WORK OF THE ALTERATION, REHABILITATION OR RECONSTRUCTION IS TO BE IN ACCORDANCE WITH TITLE 24, CCR. SHOULD ANY EXISTING CONDITIONS SUCH AS DETERIORATION OR NON-COMPLYING CONSTRUCTION BE DISCOVERED WHICH IS NOT COVERED BY THE CONTRACT DOCUMENTS WHEREIN THE FINISHED WORK WILL NOT COMPLY WITH TITLE 24, CCR, A CONSTRUCTION CHANGE DOCUMENT (CCD), OR A SEPARATE SET OF PLANS AND SPECIFICATIONS, DETAILING AND SPECIFYING THE REQUIRED WORK SHALL BE SUBMITTED TO AND APPROVED BY DSA BEFORE PROCEEDING WITH THE WORK, (SECTION 4-317(c), PART 1, TITLE 24, CCR)
6. GRADING PLANS, DRAINAGE IMPROVEMENTS, ROAD AND ACCESS REQUIREMENTS AND ENVIRONMENTAL HEALTH CONSIDERATIONS SHALL COMPLY WITH ALL LOCAL ORDINANCES

WELDING:

1. ALL WELDING SHALL COMPLY WITH AWS D1.1 SPECIFICATIONS AND SHALL BE DONE BY AWS QUALIFIED WELDERS CERTIFIED FOR THE TYPE OF WELDING TO BE PERFORMED AS REQUIRED BY DSA.
2. ALL WELDING SHALL BE DONE BY GAS METAL ARC PROCESS WITH E70XX ELECTRODES. FLUX CORE ARC WELD SHALL CONFORM TO CHARPY NOTCH TOUGHNESS RATING OF 20 ft-lb @ (0° F).
3. ALL WELDING SHALL BE DONE IN THE SHOP WITH REQUIRED INSPECTION, PRE-APPROVED BY DSA, TO ENSURE PROPER MATERIAL ID AND WELDING.
4. WELD FILLER METAL MANUFACTURER SHALL PROVIDE WRITTEN CERTIFICATION OF COMPLIANCE WITH CODE AND SPECIFICATIONS.

BOLTING:

1. ALL BOLTS SHOWN ON THESE DRAWINGS ARE HOT DIPPED GALVANIZED ASTM F3125 GRADE A325 HIGH STRENGTH BOLTS (UNO), WITH THE NUTS CONFORMING TO HOT DIPPED GALVANIZED ASTM A-563 GRADE DH.
2. HIGH STRENGTH BOLTS SHALL BE VERIFIED AND INSPECTED PER CBC 1705A2.1.
3. BEFORE ERECTING THE FRAME, VERIFY ALL BOLTS AND NUTS ARE CLEAN OF DEBRIS AND BURRS - INCLUDING THE HARDWARE ALREADY FASTENED INSIDE THE MEMBERS. CHASING SOME OF THE BOLTS AND NUTS MAY BE REQUIRED.
4. HARDENED STEEL WASHERS SHALL CONFORM TO ASTM F-436.
5. THE BOLTING INSTALLATION REQUIREMENTS OUTLINED BELOW ARE CRITICAL TO THE STRUCTURE'S DESIGN AND PERFORMANCE. THE INSTALLER IS REQUIRED TO COORDINATE THIS PHASE OF CONSTRUCTION WITH THE SPECIAL BOLTING INSPECTOR AND THE INSPECTOR OF RECORD PRIOR TO THE ERECTION OF THE FRAME BE INSTALLED AND INSPECTED PER THE APPLICABLE VERSION OF AISC'S USING HIGH-STRENGTH BOLTS", CBC 1705A.2.1; AISC 341-16 J7; AISC 360-16 N5.6.

A)PRETENSIONED JOINTS MUST BE INSTALLED AND INSPECTED TO MEET ONE OF THE FOLLOWING REQUIREMENTS:

1. TURN-OF-NUT PRETENSIONING: PER SECTION 8.2.1 OF THE *SPECIFICATION FOR STRUCTURAL JOINTS USING HIGH STRENGTH BOLTS ,* WASHERS ARE NOT REQUIRED FOR THIS METHOD, THE NUT OR HEAD SHALL BE ROTATED AS SPECIFIED IN TABLE 8.2. THE PART NOT TURNED SHALL BE PREVENTED FROM ROTATING.
2. CALIBRATED WRENCH: PER THE *SPECIFICATION FOR STRUCTURAL JOINTS USING HIGH STRENGTH BOLTS,* WASHERS ARE REQUIRED (NOT SUPPLIED BY ICON) THESE SHALL BE INSTALLED PER THE INSTALLATION TORQUE DETERMINED IN THE PRE-INSTALLATION VERIFICATION OF THE FASTENER ASSEMBLY PER SECTION 7. THE PART NOT TURNED SHALL BE PREVENTED FROM ROTATING.
3. IDENTIFIED ON THE FRAME CONNECTION DETAILS WITH "PT REQUIRED"

B) ALL OTHER JOINTS MUST BE INSTALLED AND INSPECTED TO MEET THE REQUIREMENTS OF THE SNUG-TIGHTENED JOINTS. SNUG TIGHT CONDITION EXISTS WHEN ALL PLIES IN A CONNECTION HAVE BEEN PULLED INTO FIRM CONTACT BY THE BOLTS IN THE JOINT AND ALL OF THE BOLTS IN THE JOINT HAVE BEEN TIGHTENED SUFFICIENTLY TO PREVENT REMOVAL OF THE NUTS WITHOUT THE USE OF A WRENCH.

FOUNDATIONS:

1. ALLOWABLE SOIL PRESSURES ASSUME CLASS 5 SOIL CLASSIFICATION PER CBC TABLE 1806A, UNLESS NOTED OTHERWISE. PASSIVE PRESSURE IS ASSUMED TO START 12" BELOW TOP OF FOOTING.
2. PER CBC SECTION 1803A.2, GEOTECHNICAL REPORTS ARE NOT REQUIRED FOR ONE-STORY LIGHT-STEEL FRAME BUILDINGS OF TYPE II CONSTRUCTION AND 4,000 SQUARE FOOT OR LESS IN FLOOR AREA AND NOT LOCATED WITHIN EARTHQUAKE FAULT ZONESOR SIESMIC HAZARD ZONES AS SHOWN ON THE MOST RECENT MAPS PUBLISHED BY THE CGS. ALLOWABLE FOUNDATION AND LATERAL SOIL PRESSURE VALUES MAY BE DETERMINED FROM TABLE 1806A.2.
3. FILL AND BACKFILL SHALL BE COMPACTED TO 95% OF MAX. DENSITY IN ACCORDANCE WITH ASTM TEST METHOD D-1557 OR AS RECOMMENDED BY THE GEO-TECH ENGINEER. FLOODING NOT PERMITTED.
4. THE CONTRACTOR SHALL BE RESPONSIBLE FOR ALL SHORING, ETC. NECESSARY TO SUPPORT CUT AND/OR FILL BANKS DURING EXCAVATION, AND FORMING AND PLACEMENT OF CONCRETE.
5. MINIMUM SETBACK FROM TOE OF SLOPE ON AN ASCENDING SLOPE SHALL BE 15 FEET AND MINIMUM SETBACK FROM TOE OF SLOPE ON A DESCENDING SLOPE SHALL BE 40 FEET
6. PER CBC SECTION 1803A.6, GEOHAZARD REPORTS ARE NOT REQUIRED FOR ONE-STORY LIGHT-STEEL FRAME BUILDINGS OF TYPE II CONSTRUCTION AND 4,000 SQUARE FOOT OR LESS IN FLOOR AREA AND NOT LOCATED WITHIN EARTHQUAKE FAULT ZONESOR SIESMIC HAZARD ZONES AS SHOWN ON THE MOST RECENT MAPS PUBLISHED BY THE CGS.
7. GEOHAZRD REPORTS ARE TO COMPLY WITH DSA IR A-4 PER IR-7 SECTION 1.8
8. SITE SPECIFIC GEOTECHNICAL REPORT IS REQUIRED AT THE TIME OF SITE APPLICATION IF USING OTHER THAN CLASS 5 SOIL, PER DSA IR PC-7
9. LATERAL BEARING HAS BEEN INCREASED PER CBC 1806A.3.4 FOR THE 1/2" DEFLECTION & HAS BEEN DESIGNED FOR P-DELTA EFFECTS. NO 1/3 INCREASE HAS BEEN APPLIED.
10. MINIMUM CLEARANCE BETWEEN PIERS SHALL BE 8'-0".

CONCRETE:

1. MIX DESIGN REQUIREMENTS: (NORMAL WEIGHT CONCRETE)

STRENGTH Pc (28 DAYS)	W/C RATIO (NON-AIR ENTRAINED)	W/C RATIO (AIR ENTRAINED)	SLUMP (±1")	UNIT WEIGHT (NORMAL WEIGHT)
5000 PSI	0.44	0.35	3"	150 PCF

2. CONCRETE MIX DESIGN PARAMETERS ARE GOOD FOR EXPOSURE CATEGORIES F0, F1 & F2. THE AIR ENTRAINMENT FOR THESE CATEGORIES SHALL BE AS FOLLOWS: F0-0, F1-4.5, F2-6
3. CHANGES TO THE MIX DESIGN MUST BE APPROVED BY THE ENGINEER OR ARCHITECT OF RECORD AND DSA.
4. AGGREGATES SHALL CONFORM TO THE ASTM C-33 WITH PROVEN SHRINKAGE CHARACTERISTICS OF LESS THAN 0.005. MAX AGGREGATE SIZE = 1".
5. CEMENT SHALL CONFORM TO ASTM C-150 (TYPE V) UNLESS NOTED OTHERWISE ON THE DRAWINGS.
6. CONCRETE SHALL BE MAINTAINED IN A MOIST CONDITION FOR A MINIMUM OF FIVE DAYS AFTER PLACEMENT. ALTERNATE METHODS WILL BE APPROVED IF SATISFACTORY PERFORMANCE CAN BE ASSURED.
7. CONCRETE SHALL NOT FREE FALL MORE THAN FIVE FEET.
8. CONCRETE DURABILITY SHALL BE PER CBC 1904A.1 ACI 318-19, CHAPTER 19.
9. CONCRETE SHALL BE TESTED PER CBC 1903A, TABLE 1705A.3. AND ACI 318-19, SECTION 26.12.
10. NO ADMIXTURE SHALL CONTAIN CALCIUM CHLORIDE.

REINFORCING STEEL:

1. REINFORCING STEEL SHALL BE DEFORMED STEEL CONFORMING TO THE REQUIREMENTS OF ASTM A-615, AS FOLLOWS:
   - GR 60: (#4 BARS AND LARGER)
   - GR 40: (#3 BARS)
2. DETAILING, FABRICATION, AND ERECTION OF REINFORCING BARS SHALL CONFORM TO THE ACI "MANUAL OF STANDARD PRACTICE FOR DETAILING REINFORCING CONCRETE STRUCTURES."
3. MIN. COVER FOR CAST-IN-PLACE CONCRETE SHALL BE AS FOLLOWS:
   - A. CAST AGAINST EARTH ....3"
   - B. CAST AGAINST FORM BELOW GRADE ....2"
   - C. FORMED SLABS (#11 BAR & SMALLER)......................3/4"
   - D. SLABS ON GRADE (FROM TOP OF SLAB)....................1"
4. BARS SHALL BE CLEAN OF RUST, GREASE OR OTHER MATERIAL LIKELY TO IMPAIR BOND. BENDS SHALL BE MADE COLD.
5. REINFORCING SHALL BE LAP SPLICED PER ACI 318-19, SECTION 25.5.
6. PRIOR TO PLACING OF CONCRETE, REINFORCING STEEL AND EMBEDDED ITEMS SHALL BE WELL SECURED IN POSITION.
7. WELDING OF REINFORCING IS NOT ALLOWED.
8. REINFORCING STEEL SHALL BE INSPECTED PER CBC 1705A.3.

POWDER-COAT FINISH SYSTEM:

ALL BUILDINGS THAT HAVE A POWDER-COATED FINISH SHALL MEET THE FOLLOWING SPECIFICATIONS:

1. THE STEEL FRAME (HSS SECTIONS, COLD FORMED & PLATE STEEL) SHALL BE SHOT-BLASTED TO A NEAR WHITE CONDITION PER SSPC-10 SPECIFICATIONS.
2. THE STEEL SHALL BE WASHED IN A ZINC PHOSPHATE IN AN MINIMUM THREE STAGE ELECTRO DEPOSITION PRE-TREATEMENT PROCESS.
3. IMMEDIATELY FOLLOWING PRE-TREATMENT THE STEEL SHALL BE TOTALLY COATED IN AN EPOXY PRIMER TO A UNIFORM THICKNESS OF A MINIMUM OF 0.7 TO 0.9 MILS. THE E-COATING SHALL PROVIDE A MINIMUM OF 1000 HOURS OF SALT SPRAY CORROSION PROTECTION TO THE STEEL.
4. THE STEEL SHALL THEN HAVE A TGIC POLYESTER COLOR COAT APPLIED OVER THE E-COATED SURFACE.
5. THE FINISH THICKNESS OF THESE APPLICATIONS SHALL BE A MINIMUM OF 8 TO 12 MILS.
6. ALL CARBON STEEL MEMBERS (COLUMNS, BEAMS, PLATES, & COLD FORMED STEEL ETC.) NOT POWDER-COATED SHALL BE PAINTED WITH PRIME COAT PER THE "AISC CODE OF STANDARD PRACTICE" AND THE "AISC SPECIFICATION SECTION M3"(UNLESS NOTED OTHERWISE).

ICON STD	RH/DSA-PC
DRAWN BY	JD
DATE	7/25/2023
REV	
REV DATE	

JRMA
ARCHITECTS ENGINEERS
2700 SATURN ST | BREA, CA 92821
T. 714.524.1870 | F. 714.524.1875
WWW.JRMA.COM

REGISTERED PROFESSIONAL ENGINEER MICHAEL D. LOCK S4082 STRUCTURAL STATE OF CALIFORNIA
Oct 04, 2023

APPROVED
DIV. OF THE STATE ARCHITECT
APP: 04-122375 PC
REVIEWED FOR
SS ☑ FLS ☑ ACS ☑ CG ☐
DATE: 10/10/2023

GENERAL INFO

ICON Shelter Systems Inc
DISTINCTIVE STEEL SHELTERS
WWW.ICONSHELTERS.COM
COPYRIGHT 2004, ICON SHELTER SYSTEMS, INC.
1455 LINCOLN AVE
HOLLAND MI, 49423
616.396.0919
800.748.0985
616.396.0944 FX

PRE-CHECK (PC) DOCUMENT
Code: 2022 CBC
A separate project application for construction is required.

LS1.1

PRINTED ON :

IDENTIFICATION STAMP
DIV. OF THE STATE ARCHITECT
APP: 02-122281 INC:
REVIEWED FOR
SS ☑ FLS ☑ ACS ☑
DATE: 03/19/2024

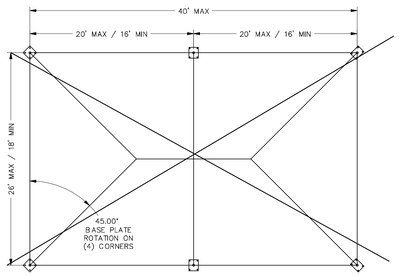

RH30x44 COLUMN LAYOUT
(2 BAYS)

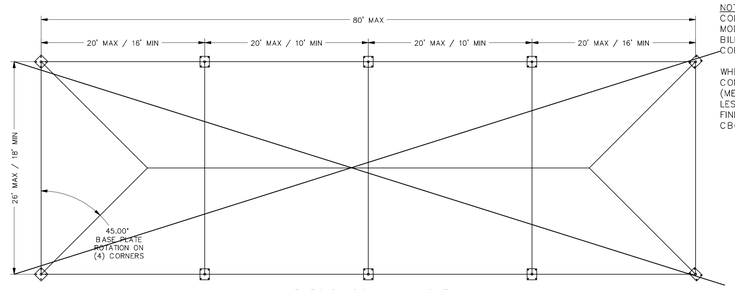

RH30x84 COLUMN LAYOUT
(4 BAYS)

NOTES:
COLUMN SIZE AND LOCATION WILL VARY DEPENDING ON MODEL TYPE ORDERED, PLEASE REFER TO JOB SPECIFIC BILL OF MATERIALS AND INSTALLATION MANUAL FOR CORRECT PLACEMENT AND SIZE.

WHERE CONCRETE SLAB SPECIFIED PORTLAND CEMENT CONCRETE PAVING SHALL HAVE A MEDIUM SALTED (MEDIUM BROOM) FINISH ON ALL SURFACES SLOPED LESS THAN 6% AND SLIP RESISTANT (HEAVY BROOM FINISH) ON ALL SURFACES SLOPED GREATER THAN 6% CBC SECTION 1133B.7.1

BASE PLATE LOCATION		
	DETAIL A	DETAIL B
8'	BP1	BP2
10'	BP1	BP2
12'	BP2	BP3

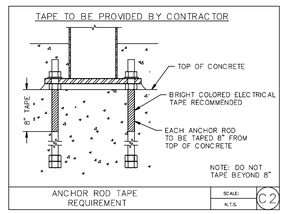

ANCHOR ROD TAPE REQUIREMENT — SCALE: N.T.S. — C2

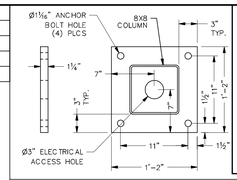

8X8 COLUMN BASE PLATE DETAIL — BP1

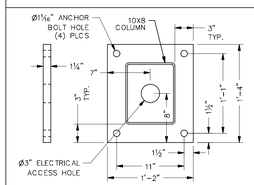

10X8 COLUMN BASE PLATE DETAIL — BP2

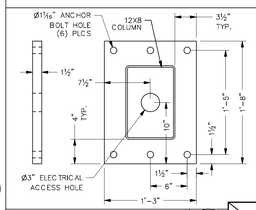

12X8 COLUMN BASE PLATE DETAIL — BP3

ALL ANCHORS RODS SHALL BE 1" X 26" U.N.O.

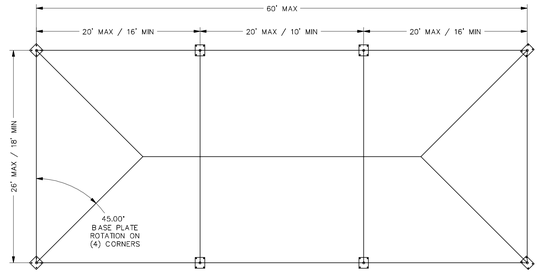

RH30x64 COLUMN LAYOUT
(3 BAYS)

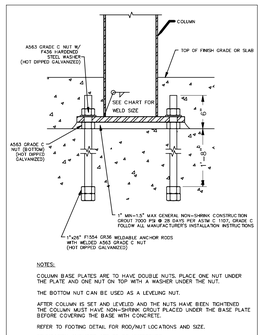

NOTES:

COLUMN BASE PLATES ARE TO HAVE DOUBLE NUTS. PLACE ONE NUT UNDER THE PLATE AND ONE NUT ON TOP WITH A WASHER UNDER THE NUT.

THE BOTTOM NUT CAN BE USED AS A LEVELING NUT.

AFTER COLUMN IS SET AND LEVELED AND THE NUTS HAVE BEEN TIGHTENED THE COLUMN MUST HAVE NON-SHRINK GROUT PLACED UNDER THE BASE PLATE BEFORE COVERING THE BASE WITH CONCRETE.

REFER TO FOOTING DETAIL FOR ROD/NUT LOCATIONS AND SIZE.

FOUNDATION ANCHORS ARE TO BE UNTORQUED.

COLUMN BASE CONNECTION DETAIL — SCALE: N.T.S. — C1

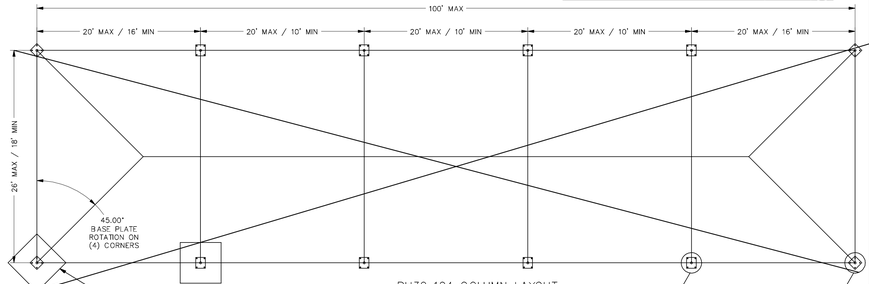

ANCHOR ROD DETAIL
1.HEAT TREATED
2.MAX CARBON CONTENT-27%
3.MAX MANGANESE CONTENT
0.6 TO 0.9%

RH30x104 COLUMN LAYOUT
(5 BAYS)

SIDE COLUMNS — CORNER COLUMNS

30' WIDE RECTANGULAR HIP

RH30 - PIER

8' height - Corner Columns				8' height - Corner Columns				8' height - Corner Columns			
Soil Class 5 - 1500 psf Bearing				Soil Class 4 - 2000 psf Bearing				Soil Class 3 - 3000 psf Bearing			
Dia (A) (in)	Depth (B) (in)	Vertical Rebar Qty	Rebar Size	Dia (A) (in)	Depth (B) (in)	Vertical Rebar Qty	Rebar Size	Dia (A) (in)	Depth (B) (in)	Vertical Rebar Qty	Rebar Size
30	114	8	6	30	98	8	6	30	88	8	6
8' height - Side Columns				8' height - Side Columns				8' height - Side Columns			
Soil Class 5 - 1500 psf Bearing				Soil Class 4 - 2000 psf Bearing				Soil Class 3 - 3000 psf Bearing			
Dia (A) (in)	Depth (B) (in)	Vertical Rebar Qty	Rebar Size	Dia (A) (in)	Depth (B) (in)	Vertical Rebar Qty	Rebar Size	Dia (A) (in)	Depth (B) (in)	Vertical Rebar Qty	Rebar Size
36	144	12	6	30	132	8	6	30	118	8	6
8' Eave - 1500 psf [ ]				8' Eave - 2000 psf [ ]				8' Eave - 3000 psf [ ]			

10' height - Corner Columns				10' height - Corner Columns				10' height - Corner Columns			
Soil Class 5 - 1500 psf Bearing				Soil Class 4 - 2000 psf Bearing				Soil Class 3 - 3000 psf Bearing			
Dia (A) (in)	Depth (B) (in)	Vertical Rebar Qty	Rebar Size	Dia (A) (in)	Depth (B) (in)	Vertical Rebar Qty	Rebar Size	Dia (A) (in)	Depth (B) (in)	Vertical Rebar Qty	Rebar Size
30	120	8	6	30	102	8	6	30	92	8	6
10' height - Side Columns				10' height - Side Columns				10' height - Side Columns			
Soil Class 5 - 1500 psf Bearing				Soil Class 4 - 2000 psf Bearing				Soil Class 3 - 3000 psf Bearing			
Dia (A) (in)	Depth (B) (in)	Vertical Rebar Qty	Rebar Size	Dia (A) (in)	Depth (B) (in)	Vertical Rebar Qty	Rebar Size	Dia (A) (in)	Depth (B) (in)	Vertical Rebar Qty	Rebar Size
36	136	12	6	36	116	12	6	36	104	12	6
10' Eave - 1500 psf [ ]				10' Eave - 2000 psf [ ]				10' Eave - 3000 psf [ ]			

12' height - Corner Columns				12' height - Corner Columns				12' height - Corner Columns			
Soil Class 5 - 1500 psf Bearing				Soil Class 4 - 2000 psf Bearing				Soil Class 3 - 3000 psf Bearing			
Dia (A) (in)	Depth (B) (in)	Vertical Rebar Qty	Rebar Size	Dia (A) (in)	Depth (B) (in)	Vertical Rebar Qty	Rebar Size	Dia (A) (in)	Depth (B) (in)	Vertical Rebar Qty	Rebar Size
30	132	8	6	30	112	8	6	30	102	8	6
12' height - Side Columns				12' height - Side Columns				12' height - Side Columns			
Soil Class 5 - 1500 psf Bearing				Soil Class 4 - 2000 psf Bearing				Soil Class 3 - 3000 psf Bearing			
Dia (A) (in)	Depth (B) (in)	Vertical Rebar Qty	Rebar Size	Dia (A) (in)	Depth (B) (in)	Vertical Rebar Qty	Rebar Size	Dia (A) (in)	Depth (B) (in)	Vertical Rebar Qty	Rebar Size
36	140	12	6	36	120	12	6	36	108	12	6
10' Eave - 1500 psf [ ]				10' Eave - 2000 psf [ ]				10' Eave - 3000 psf [ ]			

8' height - Corner Columns			
Rebar Dimensions			Weld
X (in)	Y (in)	Rebar Size	Fillet Weld "W"
12	47	6	1/4
8' height - Side Columns			
Rebar Dimensions			Weld
X (in)	Y (in)	Rebar Size	Fillet Weld "W"
16	59	7	1/4
8' Eave - Rebar & Weld			

10' height - Corner Columns			
Rebar Dimensions			Weld
X (in)	Y (in)	Rebar Size	Fillet Weld "W"
12	47	6	1/4
10' height - Side Columns			
Rebar Dimensions			Weld
X (in)	Y (in)	Rebar Size	Fillet Weld "W"
16	59	7	1/4
10' Eave - Rebar & Weld			

12' height - Corner Columns			
Rebar Dimensions			Weld
X (in)	Y (in)	Rebar Size	Fillet Weld "W"
16	59	7	5/16
12' height - Side Columns			
Rebar Dimensions			Weld
X (in)	Y (in)	Rebar Size	Fillet Weld "W"
20	59	7	1/4
12' Eave - Rebar & Weld			

SEE DETAILS BP1, BP2 OR BP3 FOR ANCHOR BOLT PATTERNS
BP1 & BP2 ARE (4) BOLT PATTERN WHILE B3 IS A (6) BOLT

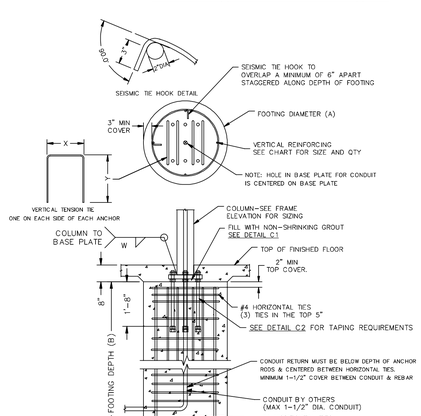

RH30 - SPREAD

8' height - Corner Columns				8' height - Corner Columns				8' height - Corner Columns			
Soil Class 5 - 1500 psf Bearing				Soil Class 4 - 2000 psf Bearing				Soil Class 3 - 3000 psf Bearing			
Size (A) (in)	Depth (in)	T&B Rebar Qty	Rebar Size	Size (A) (in)	Depth (in)	T&B Rebar Qty	Rebar Size	Size (A) (in)	Depth (in)	T&B Rebar Qty	Rebar Size
60	30	8	6	57	30	8	6	57	30	8	6
8' height - Side Columns				8' height - Side Columns				8' height - Side Columns			
Soil Class 5 - 1500 psf Bearing				Soil Class 4 - 2000 psf Bearing				Soil Class 3 - 3000 psf Bearing			
Size (A) (in)	Depth (in)	T&B Rebar Qty	Rebar Size	Size (A) (in)	Depth (in)	T&B Rebar Qty	Rebar Size	Size (A) (in)	Depth (in)	T&B Rebar Qty	Rebar Size
84	30	11	6	81	30	10	6	75	30	10	6
8' Eave - 1500 psf [ ]				8' Eave - 2000 psf [ ]				8' Eave - 3000 psf [ ]			

10' height - Corner Columns				10' height - Corner Columns				10' height - Corner Columns			
Soil Class 5 - 1500 psf Bearing				Soil Class 4 - 2000 psf Bearing				Soil Class 3 - 3000 psf Bearing			
Size (A) (in)	Depth (in)	T&B Rebar Qty	Rebar Size	Size (A) (in)	Depth (in)	T&B Rebar Qty	Rebar Size	Size (A) (in)	Depth (in)	T&B Rebar Qty	Rebar Size
66	30	9	6	63	30	8	6	63	30	8	6
10' height - Side Columns				10' height - Side Columns				10' height - Side Columns			
Soil Class 5 - 1500 psf Bearing				Soil Class 4 - 2000 psf Bearing				Soil Class 3 - 3000 psf Bearing			
Size (A) (in)	Depth (in)	T&B Rebar Qty	Rebar Size	Size (A) (in)	Depth (in)	T&B Rebar Qty	Rebar Size	Size (A) (in)	Depth (in)	T&B Rebar Qty	Rebar Size
81	30	10	6	75	30	10	6	75	30	10	6
10' Eave - 1500 psf [ ]				10' Eave - 2000 psf [ ]				10' Eave - 3000 psf [ ]			

12' height - Corner Columns				12' height - Corner Columns				12' height - Corner Columns			
Soil Class 5 - 1500 psf Bearing				Soil Class 4 - 2000 psf Bearing				Soil Class 3 - 3000 psf Bearing			
Size (A) (in)	Depth (in)	T&B Rebar Qty	Rebar Size	Size (A) (in)	Depth (in)	T&B Rebar Qty	Rebar Size	Size (A) (in)	Depth (in)	T&B Rebar Qty	Rebar Size
78	30	10	6	78	30	10	6	72	30	9	6
12' height - Side Columns				12' height - Side Columns				12' height - Side Columns			
Soil Class 5 - 1500 psf Bearing				Soil Class 4 - 2000 psf Bearing				Soil Class 3 - 3000 psf Bearing			
Size (A) (in)	Depth (in)	T&B Rebar Qty	Rebar Size	Size (A) (in)	Depth (in)	T&B Rebar Qty	Rebar Size	Size (A) (in)	Depth (in)	T&B Rebar Qty	Rebar Size
84	30	11	6	78	30	10	6	78	30	10	6
12' Eave - 1500 psf [ ]				12' Eave - 2000 psf [ ]				12' Eave - 3000 psf [ ]			

8' - Corner Columns			
Tie Dimensions			Weld
B (in)	C (in)	Rebar Size	Fillet Weld "W"
16	17.5	5	1/4
8' - Side Columns			
Tie Dimensions			Weld
B (in)	C (in)	Rebar Size	Fillet Weld "W"
16	19.5	5	1/4
8' Eave - Rebar & Weld			

10' - Corner Columns			
Tie Dimensions			Weld
B (in)	C (in)	Rebar Size	Fillet Weld "W"
16	17.5	5	1/4
10' - Side Columns			
Tie Dimensions			Weld
B (in)	C (in)	Rebar Size	Fillet Weld "W"
16	19.5	5	1/4
10' Eave - Rebar & Weld			

12' - Corner Columns			
Tie Dimensions			Weld
B (in)	C (in)	Rebar Size	Fillet Weld "W"
16	19.5	5	5/16
12' - Side Columns			
Tie Dimensions			Weld
B (in)	C (in)	Rebar Size	Fillet Weld
17	21.5	5	1/4
12' Eave - Rebar & Weld			

SEE DETAILS BP1, BP2 OR BP3 FOR ANCHOR BOLT PATTERNS
BP1 & BP2 ARE (4) BOLT PATTERN WHILE B3 IS A (6) BOLT

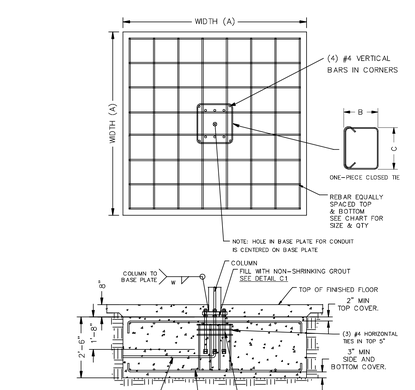

APPROVED
DIV. OF THE STATE ARCHITECT
APP: 04-122375 PC
REVIEWED FOR
SS ☑ FLS ☑ ACS ☑ CG ☐
DATE: 10/10/2023

ICON STD	RH/DSA-PC
DRAWN BY	JD
DATE	7/25/2023
REV	
REV DATE	

JRMA ARCHITECTS ENGINEERS
2700 SATURN ST BREA, CA 92821
T. 714.524.1870 F. 714.524.1873
WWW.JRMA.COM

Oct 04, 2023

30' WIDE RECTANGULAR HIP FOUNDATION PLAN

ICON Shelter Systems Inc
DISTINCTIVE STEEL SHELTERS
WWW.ICONSHELTERS.COM
COPYRIGHT 2004, ICON SHELTER SYSTEMS, INC.
1455 LINCOLN AVE
HOLLAND MI, 49423
616.396.0919
800.748.0985
616.396.0944 FX

PRE-CHECK (PC) DOCUMENT
Code: 2022 CBC
A separate project application for construction is required.

LS3.0

S:\Engineering\Inventor\DSA 2022\PC 2022 RH DSA\30 FOOT\30 WIDE BASE PLATE 1 - DSA 2022 HIP.prt

PRINTED ON :

IDENTIFICATION STAMP
DIV. OF THE STATE ARCHITECT
APP: 02-122281 INC:
REVIEWED FOR
SS ☑ FLS ☑ ACS ☑
DATE: 03/19/2024

ALL STRUCTURAL FASTENERS (NUTS, BOLTS, & WASHERS) ON THIS SHEET TO BE HOT DIPPED GALVANIZED

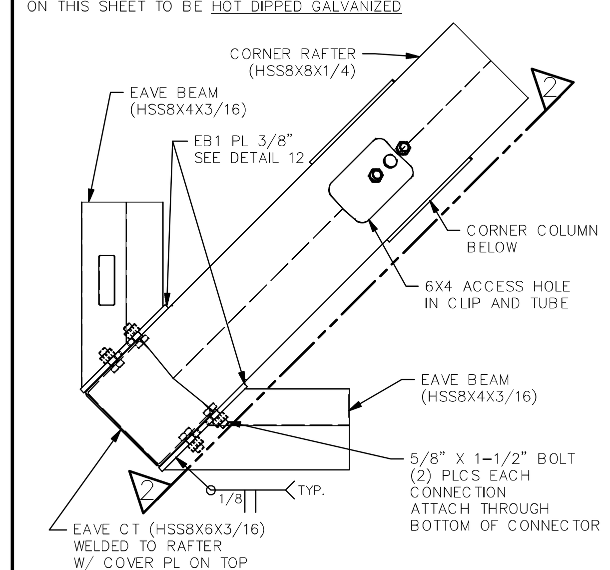

PLAN – EAVE BEAMS & CORNER RAFTER CONNECTIONS @ CORNER COLUMN | 1

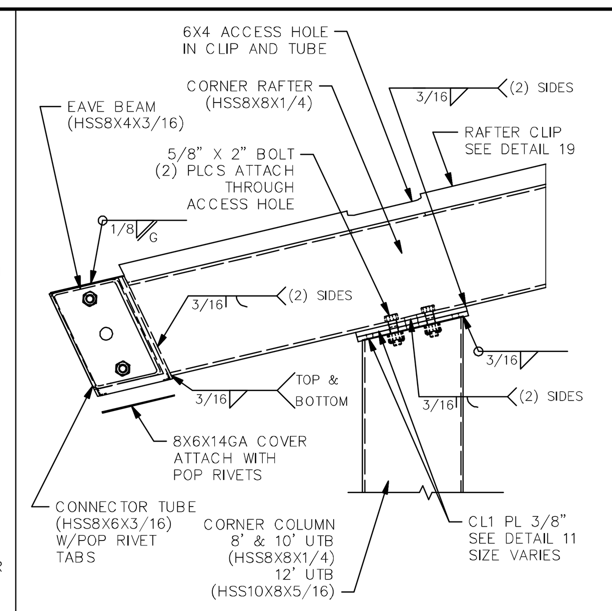

VIEW – EAVE BEAMS & CORNER RAFTER CONNECTIONS @ CORNER COLUMN | 2

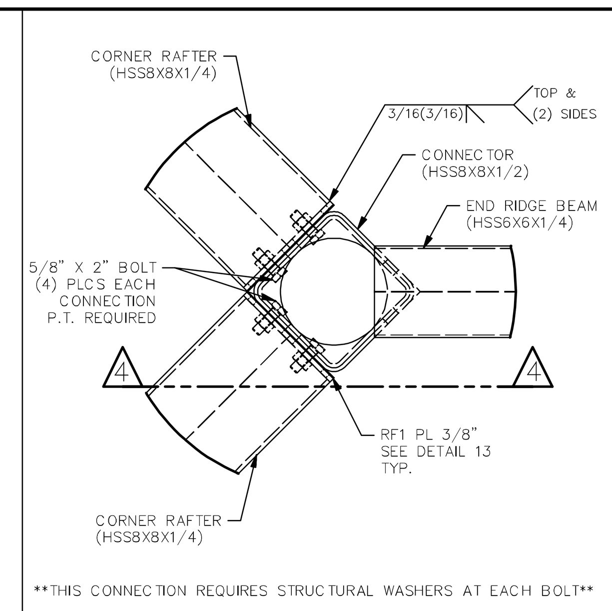

PLAN – CORNER RAFTERS CONNECTIONS @ END RIDGE BEAM | 3

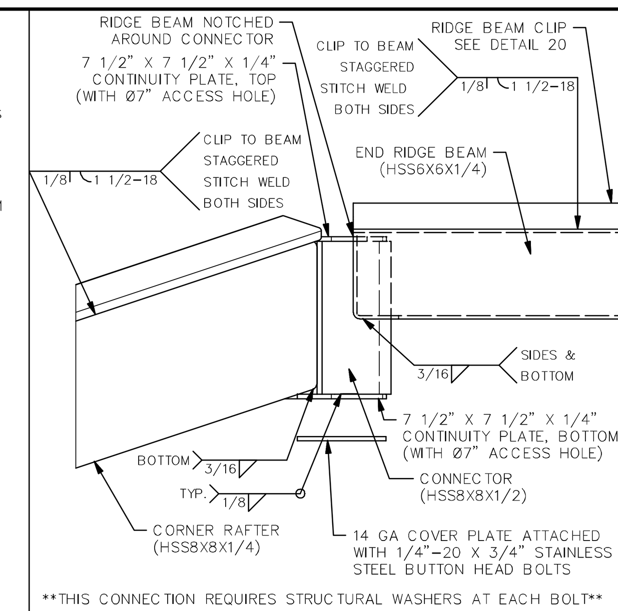

VIEW – CORNER RAFTERS CONNECTIONS @ END RIDGE BEAM | 4

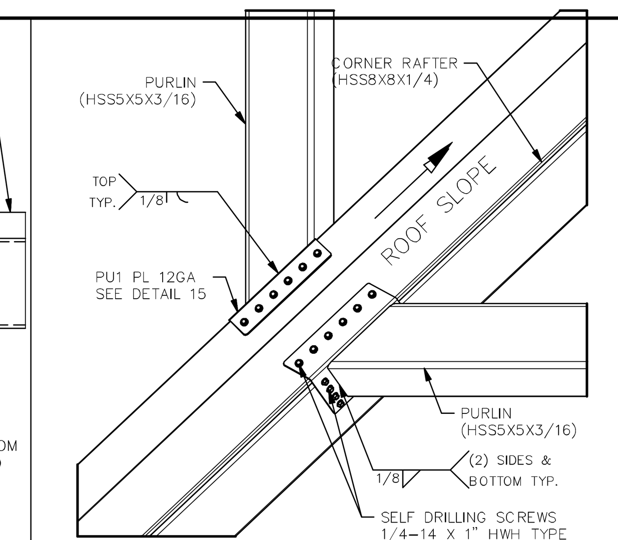

ISOMETRIC – PURLIN CONNECTIONS @ CORNER RAFTER | 5

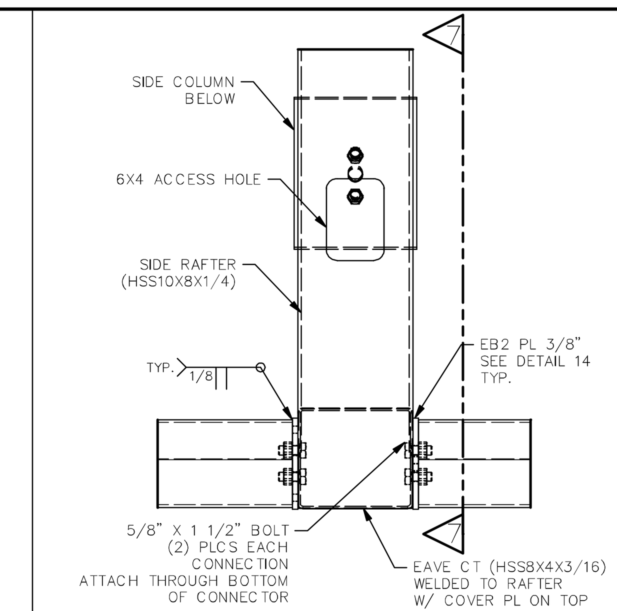

PLAN – EAVE BEAM & SIDE RAFTER CONNECTION @ SIDE COLUMN | 6

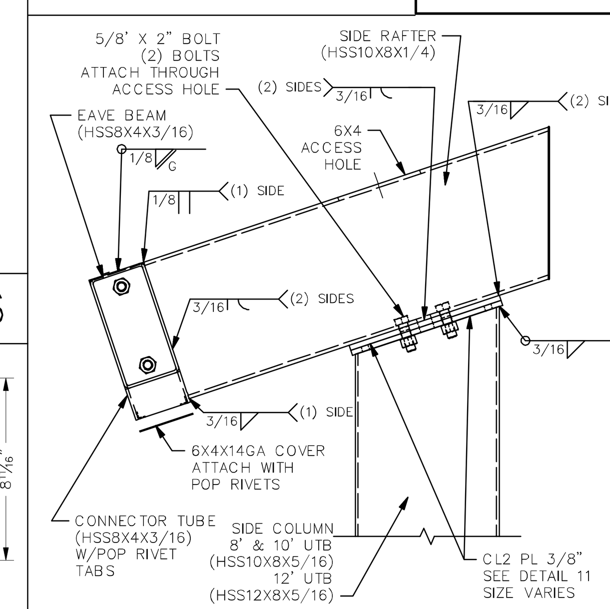

VIEW – EAVE BEAM & SIDE RAFTER CONNECTION @ SIDE COLUMN | 7

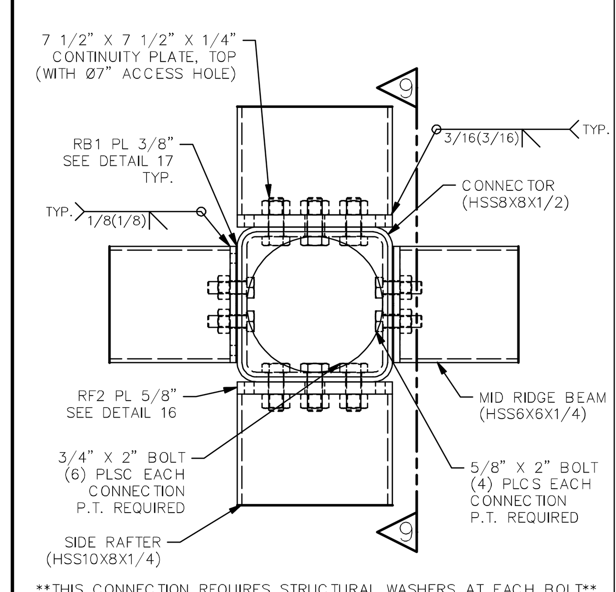

PLAN – SIDE RAFTERS & RIDGE BEAM CONNECTIONS @ CONNECTOR | 8

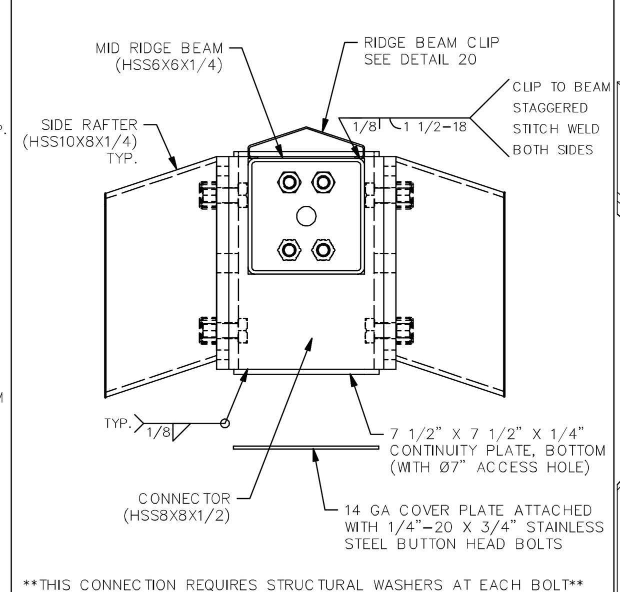

VIEW – SIDE RAFTERS & RIDGE BEAM CONNECTIONS @ CONNECTOR | 9

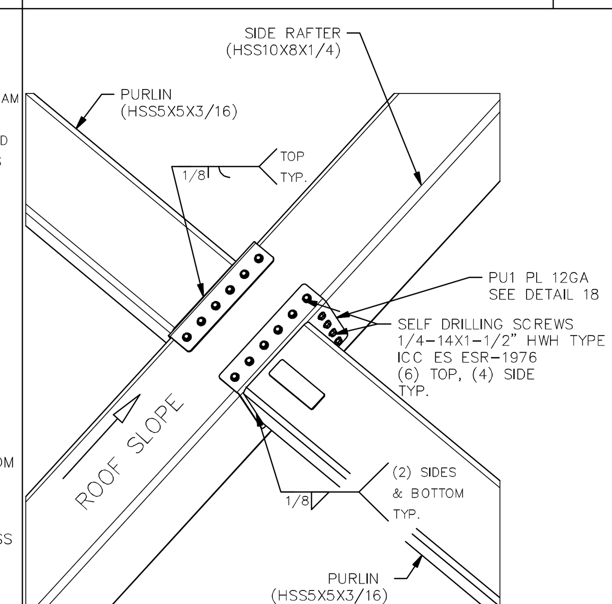

ISOMETRIC – PURLIN CONNECTIONS @ SIDE RAFTER | 10

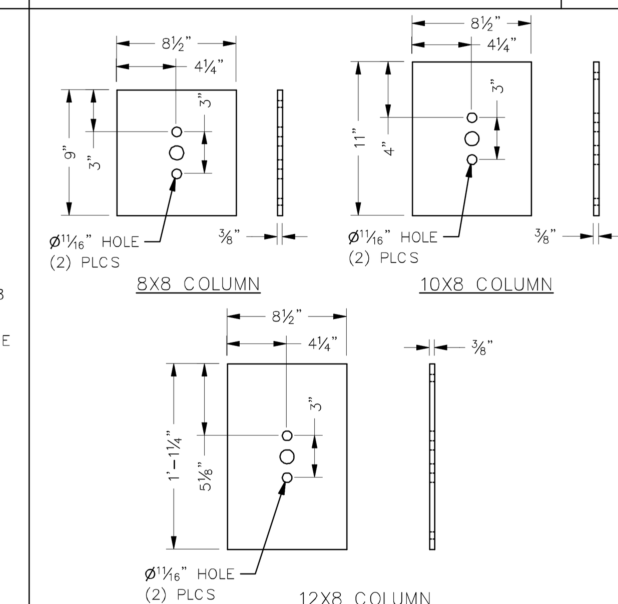

COLUMN TO RAFTER PLATE DETAIL | 11

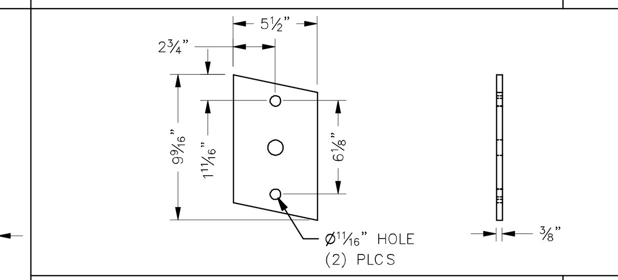

CORNER EAVE BEAM PLATE DETAIL | 12

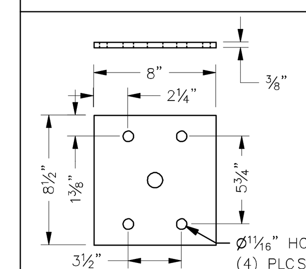

CORNER RAFTER PLATE DETAIL | 13

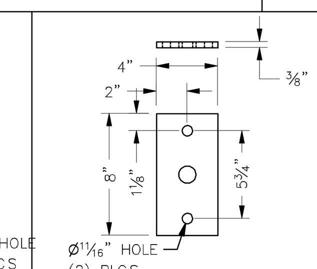

SIDE EAVE BEAM PLATE DETAIL | 14

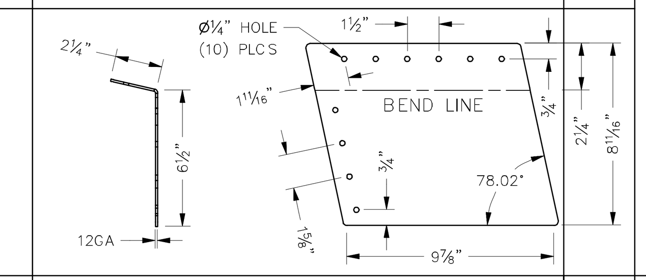

CORNER PURLIN PLATE DETAIL | 15

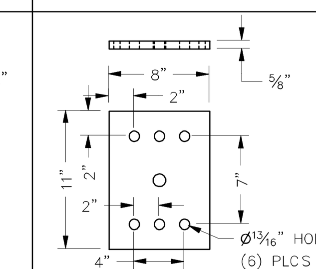

SIDE RAFTER PLATE DETAIL | 16

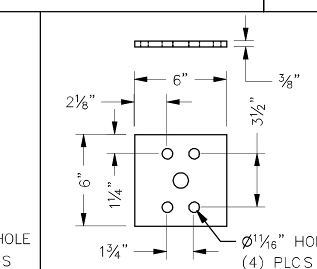

RIDGE BEAM PLATE DETAIL | 17

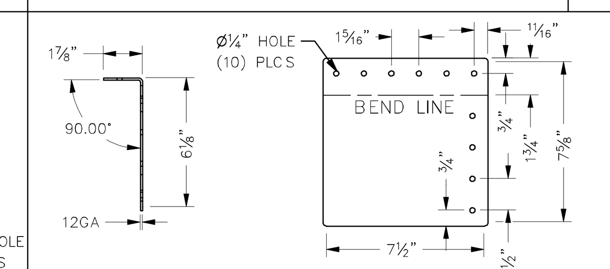

SIDE PURLIN PLATE DETAIL | 18

APPROVED
DIV. OF THE STATE ARCHITECT
APP: 04-122375 PC
REVIEWED FOR
SS ☑ FLS ☑ ACS ☑ CG ☐
DATE: 10/10/2023

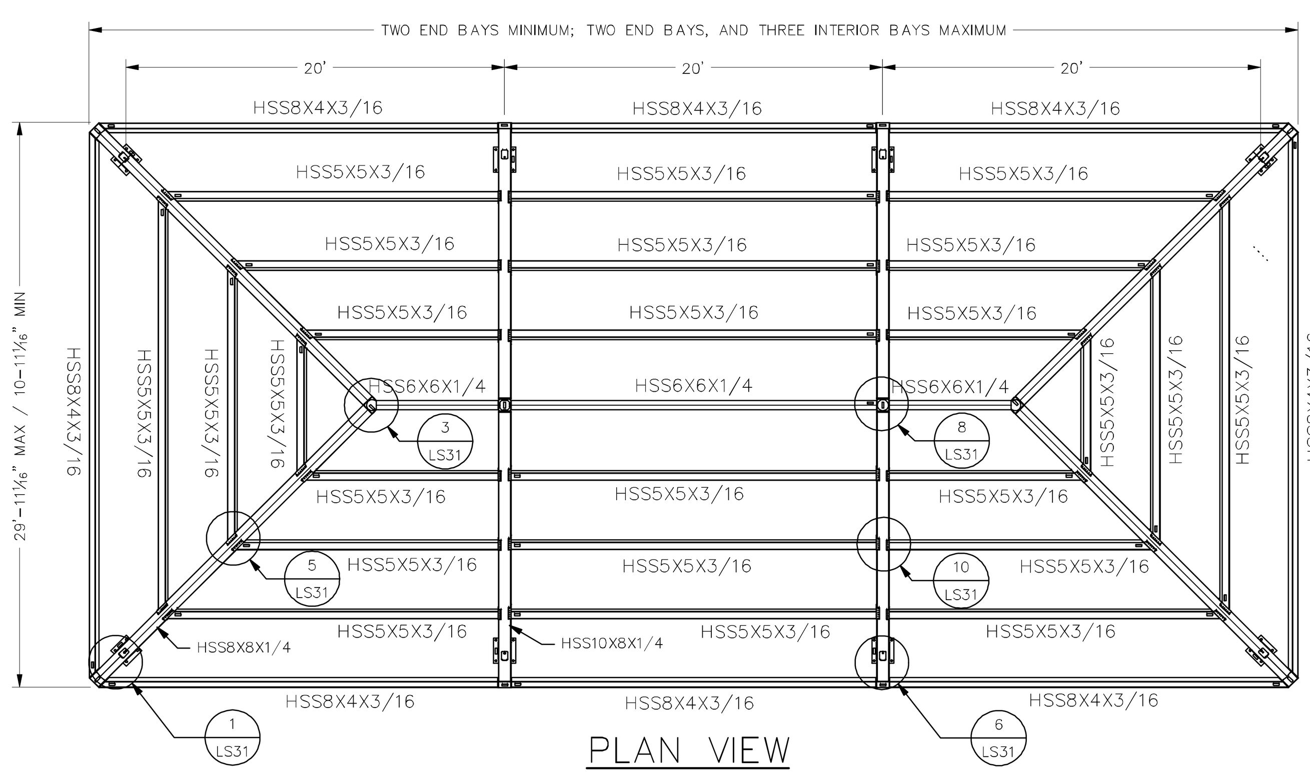

PLAN VIEW

MODEL DESIGNATION	
RH30X44	2 BAY
RH30X64	3 BAY
RH30X84	4 BAY
RH30X104	5 BAY

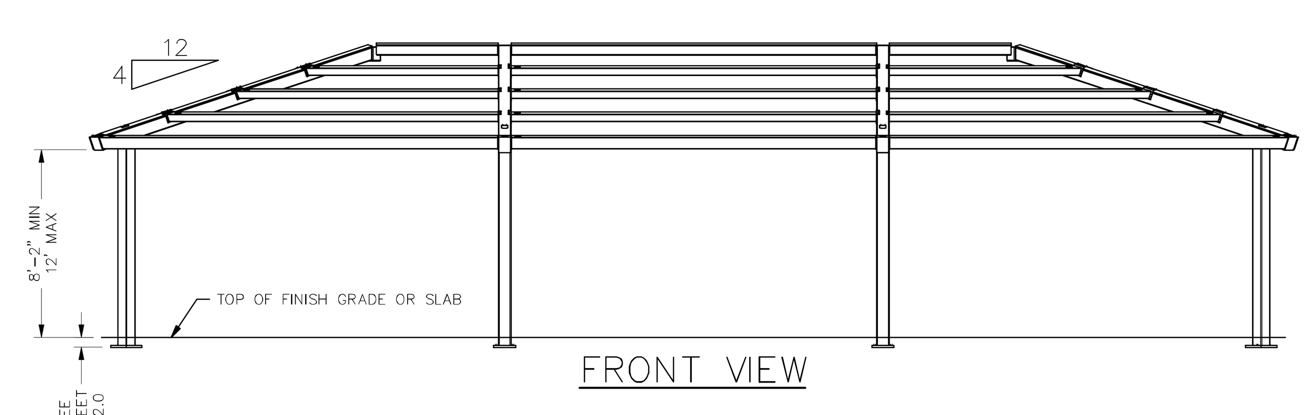

FRONT VIEW

*NOTE:
QUANTITIES WILL VARY DEPENDING ON SHELTER SIZE ORDERED, PLEASE REFER TO JOB SPECIFIC BILL OF MATERIALS AND INSTALLATION MANUAL.

ITEM	QTY	PART NUMBER	DESCRIPTION	MATERIAL	LENGTH	UNIT WEIGHT
1	4		CORNER COLUMN	**SEE NOTE BELOW		353 lbmass
2	*		SIDE COLUMN	**SEE NOTE BELOW		473 lbmass
3	2		LH SIDE EAVE BEAM	HSS8x4x3/16		311 lbmass
4	2		RH SIDE EAVE BEAM	HSS8x4x3/16		311 lbmass
5	2		END EAVE BEAM	HSS8x4x3/16		422 lbmass
6	*		SIDE EAVE BEAM	HSS8x4x3/16		287 lbmass
7	4		CORNER RAFTER	HSS8x8x1/4		607 lbmass
8	4		SIDE RAFTER	HSS10x8x1/4		473 lbmass
9	2		END RIDGE BEAM	HSS6x6x3/16		149 lbmass
10	*		MID RIDGE BEAM	HSS6x6x3/16		329 lbmass
11	*		CONNECTOR	HSS8x8x1/2		48 lbmass
12	*		LH SIDE PURLIN 1	HSS5x5x3/16		210 lbmass
13	*		RH SIDE PURLIN 1	HSS5x5x3/16		210 lbmass
14	*		END PURLIN 1	HSS5x5x3/16		257 lbmass
15	*		LH SIDE PURLIN 2	HSS5x5x3/16		166 lbmass
16	*		RH SIDE PURLIN 2	HSS5x5x3/16		166 lbmass
17	*		END PURLIN 2	HSS5x5x3/16		169 lbmass
18	*		LH SIDE PURLIN 3	HSS5x5x3/16		122 lbmass
19	*		RH SIDE PURLIN 3	HSS5x5x3/16		122 lbmass
20	*		END PURLIN 3	HSS5x5x3/16		81 lbmass
21	*		MID PURLIN	HSS5x5x3/16		235 lbmass

**NOTE:
MATERIAL WILL VARY DEPENDING ON SHELTER SIZE ORDERED.

☐ CORNER COLUMN 8' UTB – (HSS8X8X1/4)
☐ SIDE COLUMN 8' UTB – (HSS10X8X5/16)

☐ CORNER COLUMN 10' UTB – (HSS8X8X1/4)
☐ SIDE COLUMN 10' UTB – (HSS10X8X5/16)

☐ CORNER COLUMN 12' UTB – (HSS10X8X5/16)
☐ SIDE COLUMN 12' UTB – (HSS12X8X5/16)

98" MIN IF USED OVER ACCESSIBLE PARKING OR ACCESS AISLES

114" MIN IF LOCATED OVER ACCESSIBLE PASSENGER LOADING ZONES

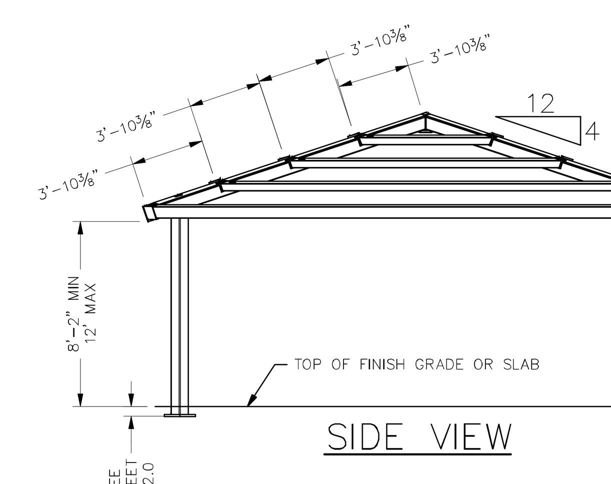

SIDE VIEW

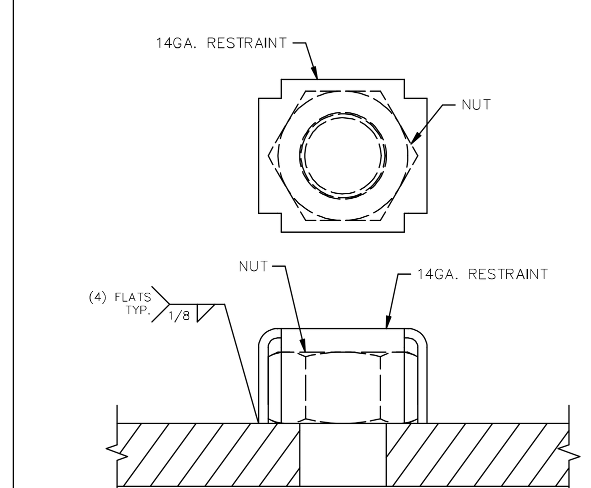

TYPICAL NUT RESTRAINING SYSTEM | NR

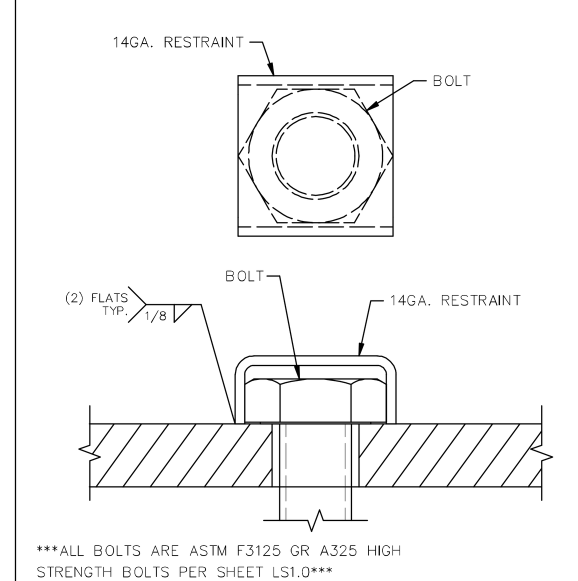

ALL BOLTS ARE ASTM F3125 GR A325 HIGH STRENGTH BOLTS PER SHEET LS1.0

TYPICAL BOLT RESTRAINING SYSTEM | BR

**IF MULTI RIB ROOFING IS SELECTED ONLY (4) PURLINS ARE REQUIRED PER BAY (2) PER END

**IF MEGA RIB ROOFING IS SELECTED ONLY (4) PURLINS ARE REQUIRED PER BAY (2) PER END

**IF STANDING SEAM ROOFING IS SELECTED ADDITIONAL PURLINS ARE REQUIRED
(6) PURLINS REQUIRED PER BAY (3) PER END

STANDING SEAM FRAMING OPTION SHOWN

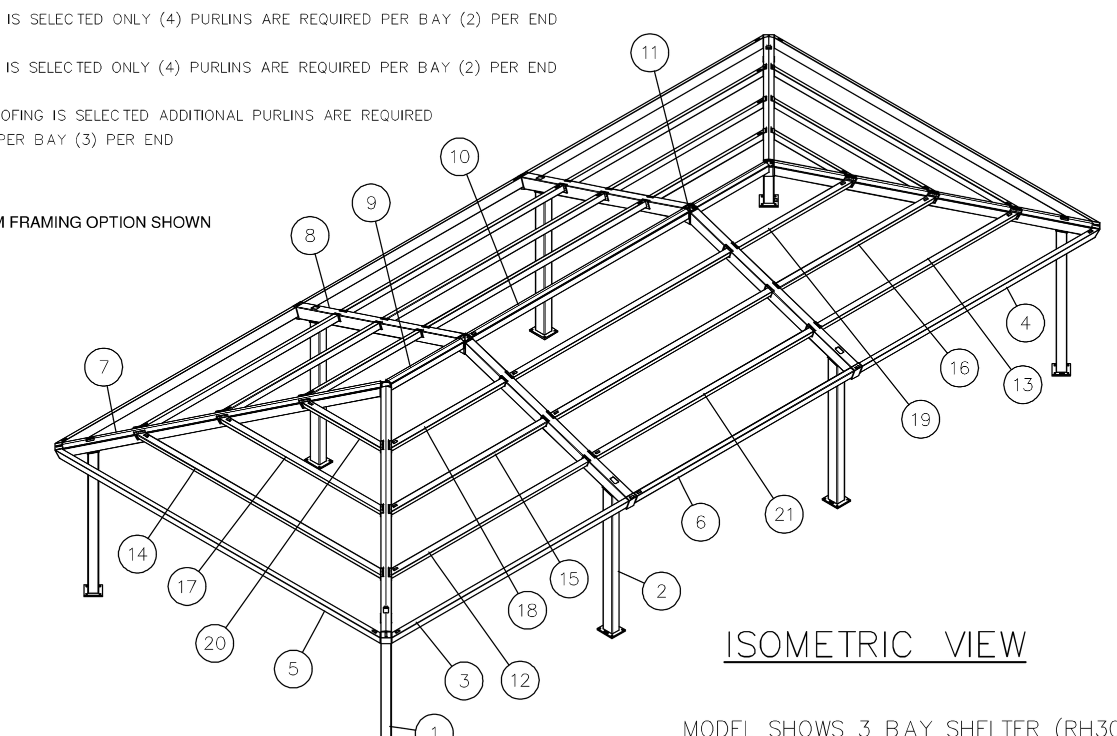

ISOMETRIC VIEW

MODEL SHOWS 3 BAY SHELTER (RH30X64)
PLEASE REFER TO ANCHOR BOLT LAYOUT SHEET FOR CORRECT COLUMN PLACEMENT BASED ON SIZE ORDERED

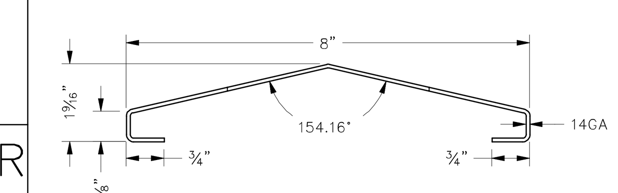

SECTION PROPERTIES
A=0.863 in^2 Fy=36 ksi
Ix=0.197 in^4 Sx=0.286 in^3
Iy=6.579 in^4 Sy=1.645 in^3

CORNER RAFTER CLIP (8" WIDE BEAM) | 19

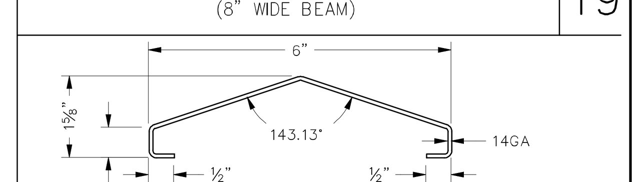

SECTION PROPERTIES
A=0.657 in^2 Fy=36 ksi
Ix=0.087 in^4 Sx=0.03 in^3
Iy=2.92 in^4 Sy=0.97 in^3

RIDGE BEAM CLIP (6" WIDE BEAM) | 20

30' WIDE RECTANGULAR HIP

PRE-CHECK (PC) DOCUMENT
Code: 2022 CBC
A separate project application for construction is required.

ICON STD	RH/DSA-PC
DRAWN BY	JD
DATE	7/25/2023
REV	
REV DATE	

JRMA
ARCHITECTS ENGINEERS
2700 SATURN ST I BREA, CA 92821
T. 714.524.1870 I F. 714.524.1875
WWW.JRMA.COM

Oct 04, 2023

30' WIDE RECTANGULAR HIP FRAMING & CONNECTION DETAILS

ICON Shelter Systems Inc
DISTINCTIVE STEEL SHELTERS
WWW.ICONSHELTERS.COM

COPYRIGHT 2004, ICON SHELTER SYSTEMS, INC.

1455 LINCOLN AVE
HOLLAND MI, 49423
616.396.0919
800.748.0985
616.396.0944 FX

LS3.1

S:\Engineering\Inventor\DSA 2019\PC 2019 RG DSA\New folder\20 FOOT\DSA RG40-P4.iam

PRINTED ON :

IDENTIFICATION STAMP
DIV. OF THE STATE ARCHITECT
APP: 02-122281 INC:
REVIEWED FOR
SS ☑ FLS ☑ ACS ☑
DATE: 03/19/2024

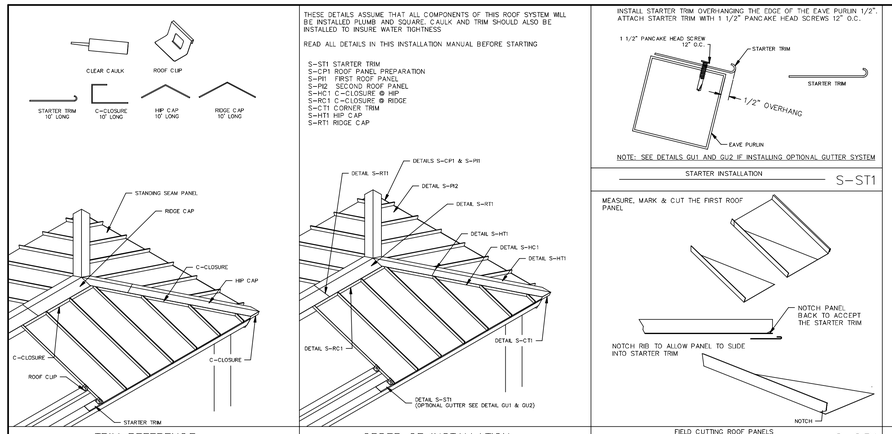

TRIM REFERENCE

THESE DETAILS ASSUME THAT ALL COMPONENTS OF THIS ROOF SYSTEM WILL BE INSTALLED PLUMB AND SQUARE. CAULK AND TRIM SHOULD ALSO BE INSTALLED TO INSURE WATER TIGHTNESS

READ ALL DETAILS IN THIS INSTALLATION MANUAL BEFORE STARTING

S-ST1 STARTER TRIM
S-CP1 ROOF PANEL PREPARATION
S-PI1 FIRST ROOF PANEL
S-PI2 SECOND ROOF PANEL
S-HC1 C-CLOSURE @ HIP
S-RC1 C-CLOSURE @ RIDGE
S-CT1 CORNER TRIM
S-HT1 HIP CAP
S-RT1 RIDGE CAP

ORDER OF INSTALLATION

INSTALL STARTER TRIM OVERHANGING THE EDGE OF THE EAVE PURLIN 1/2". ATTACH STARTER TRIM WITH 1 1/2" PANCAKE HEAD SCREWS 12" O.C.

NOTE: SEE DETAILS GU1 AND GU2 IF INSTALLING OPTIONAL GUTTER SYSTEM

STARTER INSTALLATION — S-ST1

MEASURE, MARK & CUT THE FIRST ROOF PANEL

FIELD CUTTING ROOF PANELS — S-CP1

AFTER THE ROOF PANEL HAS BEEN CUT TO SIZE (IF NECESSARY) AND NOTCHED, TEST FIT THE PANEL. THEN APPLY A BEAD OF CAULK THE APPROXIMATE LENGTH OF THE PANEL. SLIDE THE PANEL INTO PLACE, AND SQUARE IT UP TO THE ROOF.

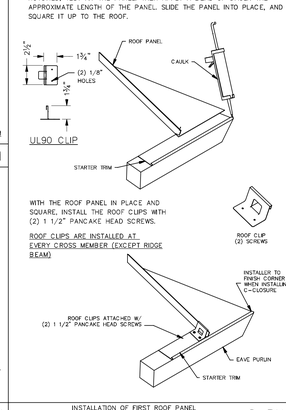

WITH THE ROOF PANEL IN PLACE AND SQUARE, INSTALL THE ROOF CLIPS WITH (2) 1 1/2" PANCAKE HEAD SCREWS.

ROOF CLIPS ARE INSTALLED AT EVERY CROSS MEMBER (EXCEPT RIDGE BEAM)

INSTALLATION OF FIRST ROOF PANEL — S-PI1

AFTER THE SECOND ROOF PANEL HAS BEEN CUT TO LENGTH (IF NECESSARY) AND NOTCHED, TEST FIT PANEL. THEN APPLY A BEAD OF CAULK INSIDE THE STARTER TRIM. SLIDE THE SECOND ROOF PANEL IN PLACE AND SNAP IT OVER THE BATTEN OF THE FIRST PANEL

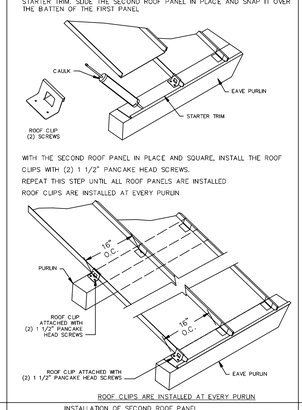

WITH THE SECOND ROOF PANEL IN PLACE AND SQUARE, INSTALL THE ROOF CLIPS WITH (2) 1 1/2" PANCAKE HEAD SCREWS.
REPEAT THIS STEP UNTIL ALL ROOF PANELS ARE INSTALLED
ROOF CLIPS ARE INSTALLED AT EVERY PURLIN

INSTALLATION OF SECOND ROOF PANEL — S-PI2

TO INSTALL C-CLOSURES ALONG THE HIP, MARK & CUT THE C-CLOSURE TO LENGTH

APPLY A BEAD OF CAULK TO THE BOTTOM OF THE C-CLOSURE AND FASTEN IT TO THE ROOF WITH (2) 3/4" PAINTED SCREWS (12" O.C. MAX CENTERED ON EACH PANEL) ALONG THE RIDGE BEAM. THEN APPLY CAULK TO THE END OF THE C-CLOSURE FOR WATER TIGHTNESS

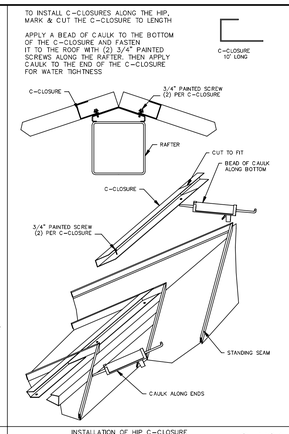

INSTALLATION OF HIP C-CLOSURE — S-HC1

ROOF NOTES

ATTENTION INSTALLERS:
METAL SHAVINGS LEFT ON ROOF WILL QUICKLY RUST AND STAIN THE ROOF FINISH!

DRILLING OR INSTALLING ROOF FASTENERS WILL CAUSE METAL SHAVINGS. THESE SHAVINGS MUST BE CAREFULLY REMOVED AT THE END OF EACH DAY BY EITHER SWEEPING OR BRUSHING THE INSTALLED ROOF.

INSTALLED CORRECTLY	INSTALLED TOO TIGHT	INSTALLED TOO LOOSE
THE SEALING MATERIAL SLIGHTLY VISIBLE AROUND THE METAL WASHER	THE SEALING MATERIAL IS DEFORMED BEYOND THE EDGE OF THE METAL WASHER	THE SEALING MATERIAL IS NOT VISIBLE AROUND THE EDGE OF THE METAL WASHER

THE ERECTOR SHOULD THOROUGHLY FAMILIARIZE THEMSELVES WITH ALL INSTALLATION INSTRUCTION MATERIAL BEFORE STARTING WORK.

THE PANELS SHOULD BE INSTALLED PLUMB, STRAIGHT, AND ACCURATELY TO THE ADJACENT WORK.

ERECTORS SHALL BE RESPONSIBLE TO ENSURE THAT THE DETAILS MEET PARTICULAR BUILDING REQUIREMENTS AND TO ASSURE ADEQUATE WATER TIGHTNESS.

FOR THE BEST APPEARANCE ALL TRIM AND FLASHING SHALL BE INSTALLED TRUE, AND IN PROPER ALIGNMENT, WITH ALL EXPOSED FASTENERS EQUALLY SPACED.

SOME FIELD CUTTING AND/OR FITTING OF PANELS, TRIM AND FLASHING IS TO BE EXPECTED BY THE ERECTOR. MINOR FIELD CORRECTIONS ARE PART OF NORMAL ERECTION WORK.

THE INSTALLATION SHALL BE PERFORMED BY EXPERIENCED METAL CRAFTSPERSON AND WORKMANSHIP SHALL MEET THE BEST INDUSTRY STANDARDS.

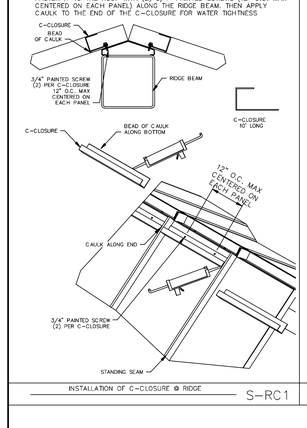

INSTALLATION OF C-CLOSURE @ RIDGE — S-RC1

TO FINISH OFF THE END OF THE HIP, MAKE A CORNER CAP BY CUTTING TWO PIECES OF C-CLOSURE TO LENGTH

MEASURE AND CUT A MITER AND CORNER TAB ON (1) PIECE OF C-CLOSURE

CUT AN OPPOSITE MITER ON THE SECOND C-CLOSURE

APPLY A BEAD OF CAULK TO THE BOTTOM OF THE CORNER TRIM

SLIDE THE CORNER TRIM UNDER THE C-CLOSURES

THEN ATTACH THE CORNER WITH POP RIVETS TO THE C-CLOSURES

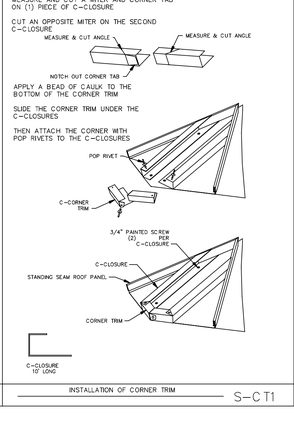

INSTALLATION OF CORNER TRIM — S-CT1

TO INSTALL THE HIP CAP, BEVEL THE END OF THE HIP CAP TO MATCH THE ANGLE OF THE ROOF

NEXT APPLY A BEAD OF CAULK ALONG THE TOP OF THE C-CLOSURES

THEN FASTEN THE HIP CAP TO THE C-CLOSURE WITH PAINTED 3/4" SCREW 12" O.C.

IF MULTIPLE PIECES OF HIP CAP ARE REQUIRED THEN LAP THE SECOND PIECE OF HIP CAP OVER THE FIRST PIECE 6", CAULK AND FASTEN WITH 3/4" PAINTED SCREWS.

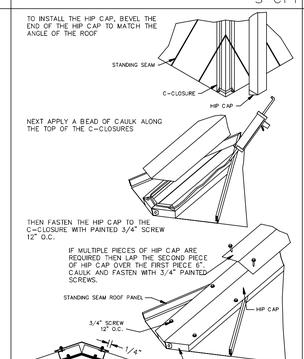

INSTALLATION OF HIP CAP — S-HT1

TO INSTALL RIDGE CAP:
FIRST APPLY A BEAD OF CAULK ALONG THE TOP OF THE C-CLOSURES

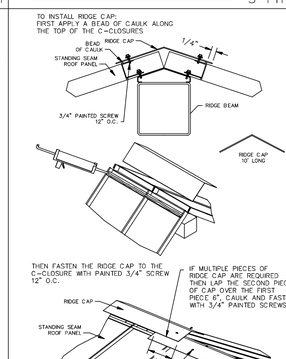

THEN FASTEN THE RIDGE CAP TO THE C-CLOSURE WITH PAINTED 3/4" SCREW 12" O.C.

IF MULTIPLE PIECES OF RIDGE CAP ARE REQUIRED THEN LAP THE SECOND PIECE OF CAP OVER THE FIRST PIECE 6", CAULK AND FASTEN WITH 3/4" PAINTED SCREWS.

INSTALLATION OF RIDGE CAP — S-RT1

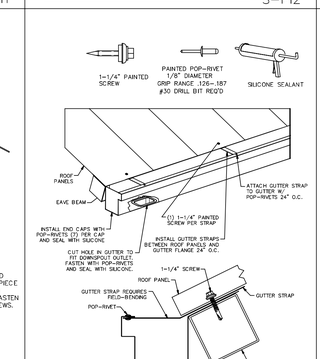

OPTIONAL GUTTER INSTALLATION STANDING SEAM ROOF — GU1

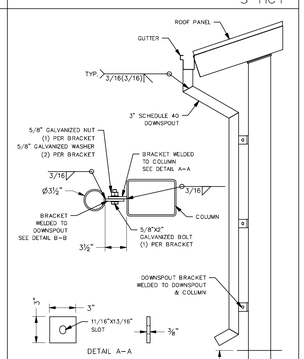

OPTIONAL GUTTER SECTION STANDING SEAM ROOF — GU2

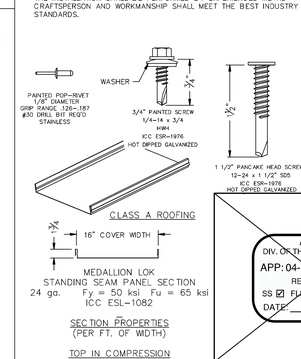

SECTION PROPERTIES
(PER FT. OF WIDTH)

TOP IN COMPRESSION
Ix=0.0898 in^4
Se=0.0565 in^3
Ma=1.4115 in-kips

BOTTOM IN COMPRESSION
Ix=0.039 in^4
Se=0.0476 in^3
Ma=1.0305 in-kips

30' WIDE RECTANGULAR HIP STANDING SEAM ROOFING

NOTE: DETAILS TYPICAL FOR ALL LAYOUTS

INSTALLER TO FIELD CUT ALL ROOF PANELS

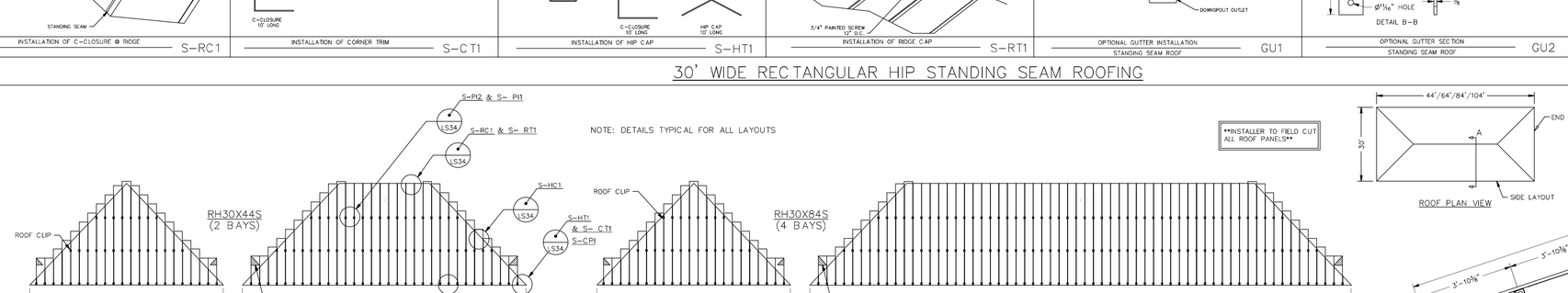

ROOF SECTION A

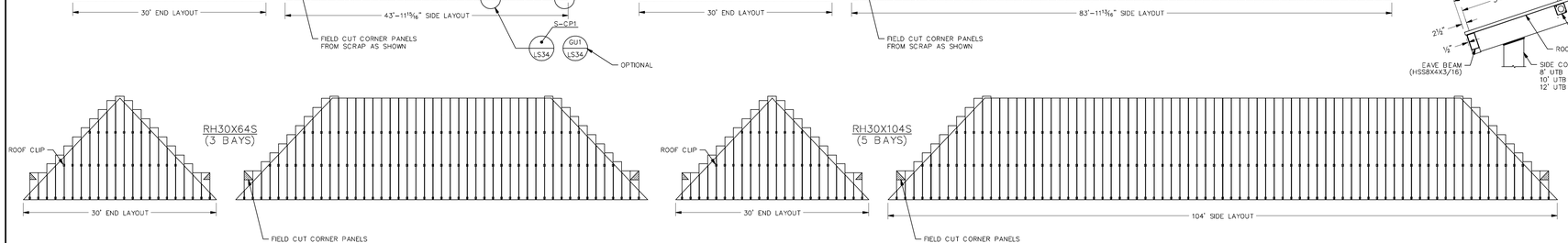

PRE-CHECK (PC) DOCUMENT
Code: 2022 CBC
A separate project application for construction is required.

ICON STD	RH/DSA-PC
DRAWN BY	JD
DATE	7/25/2023
REV	
REV DATE	

JRMA ARCHITECTS ENGINEERS
2700 SATURN STREET, CA 92627
T.714.524.1870 F.714.524.1875
WWW.JRMA.COM

Oct 04, 2023

APPROVED
DIV. OF THE STATE ARCHITECT
APP: 04-122375 PC
REVIEWED FOR
SS ☑ FLS ☑ ACS ☑ CG ☐
DATE: 10/10/2023

30' WIDE RECTANGULAR HIP STANDING SEAM ROOFING PLAN

ICON Shelter Systems Inc
DISTINCTIVE STEEL SHELTERS
WWW.ICONSHELTERS.COM
COPYRIGHT 2004, ICON SHELTER SYSTEMS, INC.
1455 LINCOLN AVE
HOLLAND MI, 49423
616.396.0919
800.748.0985
616.396.0944 FX

LS3.4

S:\Engineering\Inventor\DSA 2019\PC 2019 RH DSA\ROOF\30 FOOT\30 FOOT END SS.iam

PRINTED ON :

IDENTIFICATION STAMP
DIV. OF THE STATE ARCHITECT
APP: 02-122281 INC:
REVIEWED FOR
SS ☑ FLS ☑ ACS ☑
DATE: 03/19/2024

USASHADE
& Fabric Structures, Inc.

FABRIC SHADE STRUCTURE

DSA P.C. 04-121917

GENERAL NOTES:

1. ALL WORK SHALL CONFORM TO THE 2022 EDITION OF THE TITLE 24, CALIFORNIA CODE OF REGULATIONS (CCR).
2. ALL WORK SHALL BE IN COMPLIANCE WITH CFC CHAPTER 33 - FIRE SAFETY DURING CONSTRUCTION AND DEMOLITION.
3. SEE INDIVIDUAL STRUCTURAL DRAWINGS FOR SPECIFIC DESIGN NOTES AND LOADING.
4. PRIOR TO SUBMITTAL ARCHITECT OF RECORD SHALL IDENTIFY PC MODEL(S) SELECTED BY END USER ON SHEETS T-1.0 AND T-2.0 BY CHECKING THE APPROPRIATE BOX ASSOCIATED WITH SELECTED PC MODEL(S). EXCLUDE SHEETS FOR MODELS NOT SELECTED.

PLANS FOR SPECIFIC APPLICATION SHALL INCLUDE THE FOLLOWING:

1. COMPLETE SCOPE OF WORK INCLUDING THE SHADE STRUCTURE MODEL NUMBER, P.C. NUMBER, AND SPECIFIC SIZE OF THE SHADE STRUCTURE(S).
2. PROVIDE A CODE ANALYSIS, INCLUDING ACTUAL SHADE STRUCTURE AREA (SQ. FT.), OCCUPANCY TYPE (A-3), AND TYPE OF CONSTRUCTIONS (V-B), INDICATE OCCUPANT LOAD FACTOR (2022 CBC, SECTION 1004).
3. ACTUAL DIMENSIONS OF SHADE STRUCTURES.
4. DIMENSIONS FROM ADJACENT STRUCTURES AND PROXIMITY OF ASSUMED OR ACTUAL PROPERTY LINES.
5. INDICATE LOCATIONS OF FIRE EXTINGUISHERS WITHIN 75 FEET.
6. SHOW LOCATION OF AUDIBLE FIRE ALARM.
7. ALL SADDLES, CLAMPS AND FITTINGS SHALL CONFORM TO THE GUIDELINES AS SPECIFIED IN APPENDICES "A, B, & C", RESPECTIVELY, IN ASCE/SEI 19-16, "STRUCTURAL APPLICATIONS OF STEEL CABLES FOR BUILDINGS."
8. ARCHITECTS OF RECORD TO DETERMINE IF SPECIFIC SITE IS LOCATED IN A MAPPED GEOLOGIC HAZARD ZONE. GEOHAZARD REPORTS REQUIREMENTS SHALL COMPLY WITH DSA IR A-4.
9. ARCHITECTS OF RECORD TO DETERMINE IF SPECIFIC SITE IS LOCATED IN A MAPPED FIRE HAZARD SEVERITY ZONE OR WILDLAND INTERFACE AREA.

FOR SNOW LOAD MODELS ONLY:

10. INDICATE DIMENSIONS FROM THE ROOF TO THE HIGHER STRUCTURE OR TERRAIN FEATURE, MINIMUM DIMENSION OF 20'-0" FOR SNOW LOAD MODEL (ASCE 7-16).
11. ACTUAL SITE ELEVATION (FEET) TO DETERMINE IF THE SITE OCCURS AT OR BELOW THE UPPER ELEVATION LIMIT FOR THE GROUND SNOW LOAD SHOWN IN ASCE 7-16.

P.C. NOTES

PLANS FOR SPECIFIC APPLICATION SHALL INCLUDE THE FOLLOWING:

LIST OF APPLICABLE CODES:

- 2022 CALIFORNIA ADMINISTRATIVE CODE (CAC), PART 1, TITLE 24 C.C.R.
- 2022 CALIFORNIA BUILDING CODE (CBC), PART 2, TITLE 24 C.C.R.
- 2022 CALIFORNIA ELECTRICAL CODE (CEC) , PART 3, TITLE 24 C.C.R.
- 2022 CALIFORNIA MECHANICAL CODE (CMC), PART 4, TITLE 24 C.C.R.
- 2022 CALIFORNIA PLUMBING CODE (CPC), PART 5, TITLE 24 C.C.R.
- 2022 CALIFORNIA ENERGY CODE (CEC), PART 6, TITLE 24 C.C.R.
- 2022 CALIFORNIA FIRE CODE, PART 9, TITLE 24 C.C.R.
- 2022 CALIFORNIA EXISTING BUILDING CODE (CEBC), PART 10, TITLE 24 C.C.R.
- 2022 CALIFORNIA GREEN BUILDING STANDARDS CODE (CALGREEN), PART 11, TITLE 24 C.C.R.
- 2022 CALIFORNIA REFERENCED STANDARDS CODE, PART 12, TITLE 24 C.C.R.
- TITLE 19 C.C.R., PUBLIC SAFETY, STATE FIRE MARSHAL REGULATIONS

APPLICABLE STANDARDS:

FOR A LIST OF APPLICABLE STANDARDS, INCLUDING CALIFORNIA AMENDMENTS TO THE NFPA STANDARDS, REFER TO CBC CHAPTER 35 AND CFC CHAPTER 80.

APPLICABLE CODES

SITE SPECIFIC PARAMETERS

INSTRUCTIONS: DESIGN PROFFESIONAL SHALL CHECK THE APPROPRIATE SELECTION BOXES BELOW AND ENTER THE DESIGN PARAMETERS APPLICABLE TO THE SPECIFIC PROJECT SITE

SEISMIC

SELECT ONE

X DESIGN BASED ON SITE CLASS $D_{default}$
NO GEOTECHNICAL INVESTIGATION REQUIRED
S_S = 0.613 Fa = 1.2

☐ DESIGN BASED ON SITE CLASS DETERMINED PER CHAPTER 20 OF ASCE 7-16
GEOTECHNICAL INVESTIGATION PROVIDED
SITE CLASS: ☐ C ☐ D
S_S = _____ Fa = _____ PER ASCE 7-16 SUPPL 3, TABLE 13.4-1

☐ DESIGN BASED ON SITE CLASS SPECIFIC GROUND MOTION HAZARD ANALYSIS PER CHAPTER 21 OF ASCE 7-16
SHORT-PERIOD DESIGN SPECTRAL RESPONSE PARAMETER S_{DS} SHALL BE AS SPECIFIED IN GEOTECHNICAL INVESTIGATION
CGS APPROVAL REQUIRED
NOT ELIGIBLE FOR OTC REVIEW
SITE CLASS: ☐ C ☐ D

S_{DS} = 2/3 Fa S_S = 0.4904 ≤ 2.0
C_S = 1.6 USED IN DESIGN
SEISMIC DESIGN CATEGORY: X D ☐ E

CODE ANALYSIS

OCCUPANCY GROUP	OCCUPANT LOAD FACTOR	TOTAL OCCUPANT LOAD	SHADE STRUCTURE AREA (ft²)
A-3	15	80	1200

SITE SPECIFIC PARAMETERS

MANUFACTURER:

USA SHADE & FABRIC STRUCTURES
2580 ESTERS BOUVLEVARD, SUITE 100
DFW AIRPORT, TEXAS 75261
PH. 800-966-5005
W. www.usa-shade.com

ARCHITECT:

HIGGINSON ARCHITECTS, INC.
DAVID HIGGINSON, AIA, PRINCIPAL ARCHITECT
34247 YUCAIPA BOULEVARD, SUITE D
YUCAIPA, CALIFORNIA 92399
PH. 909-499-0058
E. dhigginson@higginsonarchitects.com
W. www.higginsonarchitects.com

LICENSED ARCHITECT
DAVID HIGGINSON
C19168
10-31-25
EXPIRATION DATE
STATE OF CALIFORNIA

STRUCTURAL ENGINEER:

MARK LOWE, S.E.
c/o USA SHADE AND FABRIC STRUCTURES

REGISTERED PROFESSIONAL ENGINEER
MARK ALBERT LOWE
No. 3693
STRUCTURAL
STATE OF CALIFORNIA

ARCHITECT / ENGINEER

✓	SHEET NO.	SHEET DESCRIPTION	UNIT STRUCTURE TYPE	MAX. UNIT SIZE	UNIT MODEL NUMBER
X	T-1.0	TITLE SHEET			
X	T-2.0	UNIT SELECTION			
	T-3.0	T&I FORMS			
	1.1-1000	PRODUCT INFORMATION	HIP	20' x 30' x 15'	DSA4012030-22
	1.2-2000	REACTIONS	HIP	20' x 30' x 15'	DSA4012030-22
	2.1-1000	PRODUCT INFORMATION	HIP	30' x 30' x 15'	DSA4013030-22
	2.2-2000	REACTIONS	HIP	30' x 30' x 15'	DSA4013030-22
	3.1-1000	PRODUCT INFORMATION	HIP	30' x 40' x 15'	DSA4013040-22
	3.2-2000	REACTIONS	HIP	30' x 40' x 15'	DSA4013040-22
	4.1-1000	PRODUCT INFORMATION	HIP	40' x 40' x 15'	DSA4014040-22
	4.2-2000	REACTIONS	HIP	40' x 40' x 15'	DSA4014040-22
	5.1-1000	PRODUCT INFORMATION	HIP	20' x 30' x 12'	DSA401203012-22
	5.2-2000	REACTIONS	HIP	20' x 30' x 12'	DSA401203012-22
	6.1-1000	PRODUCT INFORMATION	HIP	30' x 30' x 12'	DSA401303012-22
	6.2-2000	REACTIONS	HIP	30' x 30' x 12'	DSA401303012-22
X	7.1-1000	PRODUCT INFORMATION	HIP	30' x 40' x 12'	DSA401304012-22
X	7.2-2000	REACTIONS	HIP	30' x 40' x 12'	DSA401304012-22
	8.1-1000	PRODUCT INFORMATION	HIP (20 psf SNOW LOAD)	20' x 30' x 15'	DSA401S2030-22
	8.2-2000	REACTIONS	HIP (20 psf SNOW LOAD)	20' x 30' x 15'	DSA401S2030-22
	9.1-1000	PRODUCT INFORMATION	JOINED HIPS	VARIES	DSA401J-22
	9.2-1001	DETAILS	JOINED HIPS	VARIES	DSA401J-22
	9.3-2000	REACTIONS	JOINED HIPS	VARIES	DSA401J-22
	10.1-1000	PRODUCT INFORMATION	QUAD JOINED HIPS	VARIES	DSA401Q-22
	10.2-1001	DETAILS	QUAD JOINED HIPS	VARIES	DSA401Q-22
	10.3-2000	REACTIONS	QUAD JOINED HIPS	VARIES	DSA401Q-22
	11.1-1000	PRODUCT INFORMATION	FULL CANTILEVER HIP SINGLE	20' x 30' x 15'	DSA2022030-22
	11.2-2000	REACTIONS	FULL CANTILEVER HIP SINGLE	20' x 30' x 15'	DSA2022030-22
	12.1-1000	PRODUCT INFORMATION	FULL CANTILEVER HIP JOINED	20' x 200' x 15'	DSA3022060-22
	12.2-2000	REACTIONS	FULL CANTILEVER HIP JOINED	20' x 200' x 15'	DSA3022060-22
	13.1-1000	PRODUCT INFORMATION	SINGLE POST PYRAMID	14' x 14' x 12'	DSA1031414-22
	13.2-2000	REACTIONS	SINGLE POST PYRAMID	14' x 14' x 12'	DSA1031414-22
	14.1-1000	PRODUCT INFORMATION	SINGLE POST PYRAMID	20' x 20' x 12'	DSA1032020-22
	14.2-2000	REACTIONS	SINGLE POST PYRAMID	20' x 20' x 12'	DSA1032020-22
	15.1-1000	PRODUCT INFORMATION	SINGLE POST PYRAMID CANTILEVER	14' x 14' x 12'	DSA1241414-22
	15.2-2000	REACTIONS	SINGLE POST PYRAMID CANTILEVER	14' x 14' x 12'	DSA1241414-22
	16.1-1000	PRODUCT INFORMATION	SINGLE POST PYRAMID CANTILEVER	20' x 20' x 12'	DSA1242020-22
	16.2-2000	REACTIONS	SINGLE POST PYRAMID CANTILEVER	20' x 20' x 12'	DSA1242020-22
	17.1-1000	PRODUCT INFORMATION	MARINER PEAK	30' x 30' x 15'	DSA4073030-22
	17.2-2000	REACTIONS	MARINER PEAK	30' x 30' x 15'	DSA4073030-22
	18.1-1000	PRODUCT INFORMATION	MARINER PEAK	30' x 40' x 18'	DSA4073040-22
	18.2-2000	REACTIONS	MARINER PEAK	30' x 40' x 18'	DSA4073040-22
	19.1-1000	PRODUCT INFORMATION	MARINER PEAK JOINED	30' x 133' x 15'	DSA407J3060-22
	19.2-2000	REACTIONS	MARINER PEAK JOINED	30' x 133' x 15'	DSA407J3060-22
	20.1-1000	PRODUCT INFORMATION	MARINER PEAK QUAD	60' x 60' x 15'	DSA407Q6060-22
	20.2-2000	REACTIONS	MARINER PEAK QUAD	60' x 60' x 15'	DSA407Q6060-22
	21.1-1000	PRODUCT INFORMATION	TRI TRUSS HIP SINGLE WIDE	20' x 30' x 15'	DSA2062030-22
	21.2-2000	REACTIONS	TRI TRUSS HIP SINGLE WIDE	20' x 30' x 15'	DSA2062030-22
	22.1-1000	PRODUCT INFORMATION	TRI TRUSS HIP JOINED	20' x 200' x 15'	DSA3052060-22
	22.2-2000	REACTIONS	TRI TRUSS HIP JOINED	20' x 200' x 15'	DSA3052060-22
	23.1-1000	PRODUCT INFORMATION	TENSION SAILS THREE POINT	30' x 133' x 15'	DSA30730-22
	23.2-2000	REACTIONS	TENSION SAILS THREE POINT	30' x 133' x 15'	DSA30730-22
	24.1-1000	PRODUCT INFORMATION	TENSIONS SAILS FOUR POINT	20' x 200' x 15'	DSA4182020-22
	24.2-2000	REACTIONS	TENSIONS SAILS FOUR POINT	20' x 200' x 15'	DSA4182020-22
	25.1-1000	PRODUCT INFORMATION	TENSIONS SAILS FOUR POINT	30' x 133' x 15'	DSA4183030-22
	25.2-2000	REACTIONS	TENSIONS SAILS FOUR POINT	30' x 133' x 15'	DSA4183030-22
	26.1-1000	PRODUCT INFORMATION	TRIANGLE	25' x 25' x 15'	DSA30125-22
	26.2-2000	REACTIONS	TRIANGLE	25' x 25' x 15'	DSA30125-22
	27.1-1000	PRODUCT INFORMATION	TRIANGLE	40' x 40' x 15'	DSA30140-22
	27.2-2000	REACTIONS	TRIANGLE	40' x 40' x 15'	DSA30140-22
	28.1-1000	PRODUCT INFORMATION	HEXAGON	Ø40' X 15'	DSA60340-22
	28.2-2000	REACTIONS	HEXAGON	Ø40' X 15'	DSA60340-22
	29.1-1000	PRODUCT INFORMATION	HEXAGON	Ø60' X 15'	DSA60360-22
	29.2-2000	REACTIONS	HEXAGON	Ø60' X 15'	DSA60360-22

TOTAL SHEET COUNT: 63 SHEETS

SHEET INDEX

THESE PLANS AND SPECIFICATIONS ARE THE PROPERTY OF USA SHADE AND FABRIC STRUCTURES AND SHALL NOT BE REPRODUCED WITHOUT THEIR WRITTEN

USASHADE & Fabric Structures®

CORPORATE HEADQUARTERS
2580 ESTERS BLVD. SUITE 100
DFW AIRPORT, TX, 75261
800-966-5005

CERTIFICATIONS:
IAS CERTIFICATION No: FA-428
CLARK COUNTY MANUFACTURER CERTIFICATION NUMBER (NEVADA): 355

CUSTOMER:
Washington U.S.D.

PROJECT NAME:
River City High School

LOCATION:
1 Raider Lane
West Sacramento, CA 95691

MODEL NUMBER:

APPROVED
DIV. OF THE STATE ARCHITECT
APP: 04-121917 PC
REVIEWED FOR
SS ☑ FLS ☑ ACS ☑ CG ☐
DATE: 10/30/2023

STRUCTURE TYPE:

SCALE : VARIES

DRAWING SIZE:
D

PRE-CHECK (PC) DOCUMENT
Code : 2022 CBC
A separate project application for construction is required.

Eng. By :	DWH	2/14/23
Design By :	DWH	2/14/23
Approved By :	DWH	2/14/23

DRAWING DESCRIPTION:

DWG.
TITLE SHEET

SHEET
T-1.0

REV.

IDENTIFICATION STAMP
DIV. OF THE STATE ARCHITECT
APP: 02-122281 INC:
REVIEWED FOR
SS ☑ FLS ☑ ACS ☑
DATE: 03/19/2024

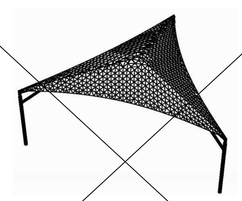

STRUCTURE MODEL:	DSA30125-22	SEE SHEET 26.1-1000
MAX. SIZE:	25' x 25' x 15'	
MAX. AREA:	271 SQ. FT.	
MAX. OCCUPANCY:	18 PERSONS	
STRUCTURE MODEL:	DSA30140-22	SEE SHEET 27.1-1000
MAX. SIZE:	40' x 40' x 15'	
MAX. AREA:	692 SQ. FT.	
MAX. OCCUPANCY:	46 PERSONS	

FOR DSA 103 TESTING & INSPECTIONS SAMPLE, SEE PC T-3.0 & PC T-4.0

TRIANGLE

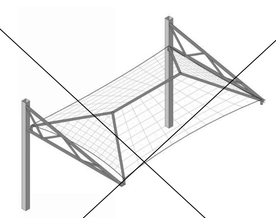

STRUCTURE MODEL:	DSA20620230-22	SEE SHEET 21.1-1000
MAX. SIZE:	20' x 20' x 15'	
MAX. AREA:	600 SQ. FT.	
MAX. OCCUPANCY:	40 PERSONS	

FOR DSA 103 TESTING & INSPECTIONS SAMPLE, SEE PC T-3.0 & PC T-4.0

TRI-TRUSS HIP SINGLE WIDE

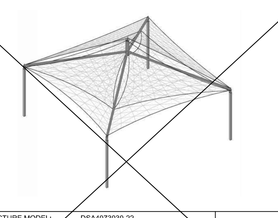

STRUCTURE MODEL:	DSA4073030-22	SEE SHEET 17.1-1000
MAX. SIZE:	30' x 30' x 15'	
MAX. AREA:	600 SQ. FT.	
MAX. OCCUPANCY:	40 PERSONS	
STRUCTURE MODEL:	DSA4073040-22	SEE SHEET 18.1-1000
MAX. SIZE:	30' x 40' x 15'	
MAX. AREA:	1,200 SQ. FT.	
MAX. OCCUPANCY:	60 PERSONS	

FOR DSA 103 TESTING & INSPECTIONS SAMPLE, SEE PC T-3.0 & PC T-4.0

MARINER PEAK

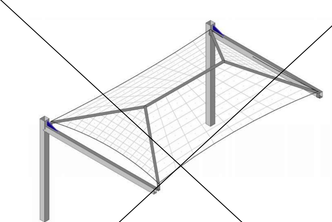

STRUCTURE MODEL:	DSA2022030-22	SEE SHEET 11.1-1000
MAX. SIZE:	20' x 30' x 15'	
MAX. AREA:	600 SQ. FT.	
MAX. OCCUPANCY:	40 PERSONS	

FOR DSA 103 TESTING & INSPECTIONS SAMPLE, SEE PC T-3.0 & PC T-4.0

FULL CANTILEVER HIP SINGLE

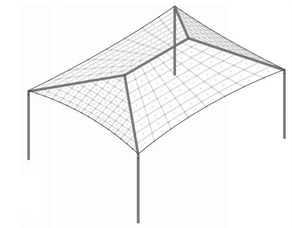

STRUCTURE MODEL:	DSA4012030-22	SEE SHEET 1.1-1000
MAX. SIZE:	20' x 30' x 15'	
MAX. AREA:	600 SQ. FT.	
MAX. OCCUPANCY:	40 PERSONS	
STRUCTURE MODEL:	DSA4013030-22	SEE SHEET 2.1-1000
MAX. SIZE:	30' x 30' x 15'	
MAX. AREA:	900 SQ. FT.	
MAX. OCCUPANCY:	60 PERSONS	
STRUCTURE MODEL:	DSA4013040-22	SEE SHEET 3.1-1000
MAX. SIZE:	30' x 40' x 15'	
MAX. AREA:	1,200 SQ. FT.	
MAX. OCCUPANCY:	60 PERSONS	
STRUCTURE MODEL:	DSA401203012-22	SEE SHEET 4.1-1000
MAX. SIZE:	20' x 30' x 12'	
MAX. AREA:	600 SQ. FT.	
MAX. OCCUPANCY:	40 PERSONS	
STRUCTURE MODEL:	DSA401303012-22	SEE SHEET 5.1-1000
MAX. SIZE:	30' x 30' x 12'	
MAX. AREA:	900 SQ. FT.	
MAX. OCCUPANCY:	60 PERSONS	
X STRUCTURE MODEL:	DSA401304012-22	SEE SHEET 6.1-1000
MAX. SIZE:	30' x 40' x 12'	
MAX. AREA:	1,200 SQ. FT.	
MAX. OCCUPANCY:	60 PERSONS	
STRUCTURE MODEL:	DSA4014040-22	SEE SHEET 7.1-1000
MAX. SIZE:	40' x 40' x 12'	
MAX. AREA:	1,600 SQ. FT.	
MAX. OCCUPANCY:	106 PERSONS	
STRUCTURE MODEL:	DSA401S2030-22 (20 psf SNOW LOAD)	SEE SHEET 8.1-1000
MAX. SIZE:	20' x 30' x 15'	
MAX. AREA:	600 SQ. FT.	
MAX. OCCUPANCY:	40 PERSONS	

FOR DSA 103 TESTING & INSPECTIONS SAMPLE, SEE PC T-3.0 & PC T-4.0

HIP

STRUCTURE MODEL:	DSA60340-22	SEE SHEET 28.1-1000
MAX. SIZE:	60x60 x 15	
MAX. AREA:	1,040 SQ. FT.	
MAX. OCCUPANCY:	69 PERSONS	
STRUCTURE MODEL:	DSA60360-22	SEE SHEET 29.1-1000
MAX. SIZE:	0x60' x 15'	
MAX. AREA:	2,338 SQ. FT.	
MAX. OCCUPANCY:	156 PERSONS	

FOR DSA 103 TESTING & INSPECTIONS SAMPLE, SEE PC T-3.0 & PC T-4.0

HEXAGON

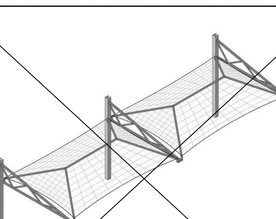

STRUCTURE MODEL:	DSA3052060-22	SEE SHEET 22.1-1000
MAX. SIZE:	20' x 200' x 15'	
MAX. AREA:	4,000 SQ. FT.	
MAX. OCCUPANCY:	266 PERSONS	

FOR DSA 103 TESTING & INSPECTIONS SAMPLE, SEE PC T-3.0 & PC T-4.0

TRI-TRUSS HIP JOINED

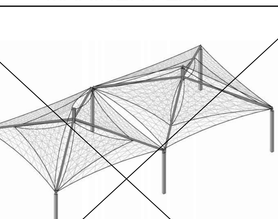

STRUCTURE MODEL:	DSA407J3060-22	SEE SHEET 19.1-1000
MAX. SIZE:	30' x 133' x 15'	
MAX. AREA:	3,990 SQ. FT.	
MAX. OCCUPANCY:	266 PERSONS	

FOR DSA 103 TESTING & INSPECTIONS SAMPLE, SEE PC T-3.0 & PC T-4.0

MARINER PEAK JOINED

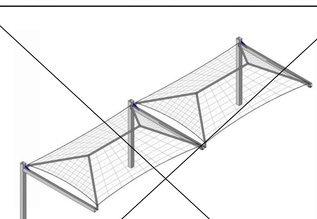

STRUCTURE MODEL:	DSA3022060-22	SEE SHEET 12.1-1000
MAX. SIZE:	20' x 200' x 15'	
MAX. AREA:	4,000 SQ. FT.	
MAX. OCCUPANCY:	266 PERSONS	

FOR DSA 103 TESTING & INSPECTIONS SAMPLE, SEE PC T-3.0 & PC T-4.0

FULL CANTILEVER HIP JOINED

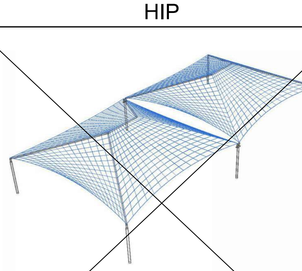

STRUCTURE MODEL:	DSA401J-22	SEE SHEET 9.1-1000
MAX. SIZE:	VARIES, SEE JOINED HIP UNIT SHEET	
MAX. AREA:	VARIES	
MAX. OCCUPANCY:	VARIES	

FOR DSA 103 TESTING & INSPECTIONS SAMPLE, SEE PC T-3.0 & PC T-4.0

JOINED HIP

NOT USED

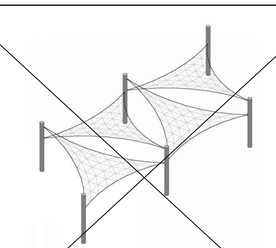

STRUCTURE MODEL:	DSA30730-22	SEE SHEET 23.1-1000
MAX. SIZE:	30' x 133' x 15'	
MAX. AREA:	3,990 SQ. FT.	
MAX. OCCUPANCY:	266 PERSONS	

FOR DSA 103 TESTING & INSPECTIONS SAMPLE, SEE PC T-3.0 & PC T-4.0

TENSIONS SAILS THREE-POINT

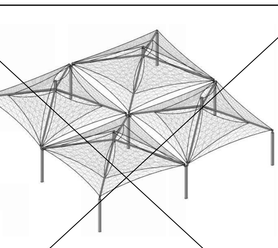

STRUCTURE MODEL:	DSA407Q6060-22	SEE SHEET 20.1-1000
MAX. SIZE:	60' x 60' x 15'	
MAX. AREA:	3,600 SQ. FT.	
MAX. OCCUPANCY:	240 PERSONS	

FOR DSA 103 TESTING & INSPECTIONS SAMPLE, SEE PC T-3.0 & PC T-4.0

MARINER PEAK QUAD

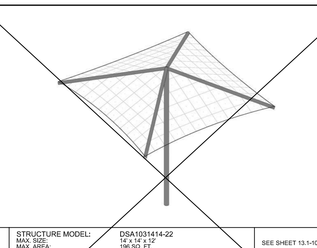

STRUCTURE MODEL:	DSA1031414-22	SEE SHEET 13.1-1000
MAX. SIZE:	14' x 14' x 12'	
MAX. AREA:	196 SQ. FT.	
MAX. OCCUPANCY:	13 PERSONS	
STRUCTURE MODEL:	DSA1032020-22	SEE SHEET 14.1-1000
MAX. SIZE:	20' x 20' x 12'	
MAX. AREA:	400 SQ. FT.	
MAX. OCCUPANCY:	26 PERSONS	

FOR DSA 103 TESTING & INSPECTIONS SAMPLE, SEE PC T-3.0 & PC T-4.0

SINGLE POST PYRAMID

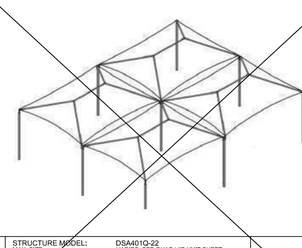

STRUCTURE MODEL:	DSA401Q-22	SEE SHEET 10.1-1000
MAX. SIZE:	VARIES, SEE QUAD HIP UNIT SHEET	
MAX. AREA:	VARIES	
MAX. OCCUPANCY:	VARIES	

FOR DSA 103 TESTING & INSPECTIONS SAMPLE, SEE PC T-3.0 & PC T-4.0

QUAD HIP

NOT USED

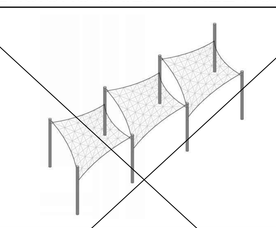

STRUCTURE MODEL:	DSA4182020-22	SEE SHEET 24.1-1000
MAX. SIZE:	20' x 200' x 15'	
MAX. AREA:	4,000 SQ. FT.	
MAX. OCCUPANCY:	266 PERSONS	
STRUCTURE MODEL:	DSA4183030-22	SEE SHEET 25.1-1000
MAX. SIZE:	30' x 133' x 15'	
MAX. AREA:	3,990 SQ. FT.	
MAX. OCCUPANCY:	266 PERSONS	

FOR DSA 103 TESTING & INSPECTIONS SAMPLE, SEE PC T-3.0 & PC T-4.0

TENSIONS SAILS FOUR-POINT

NOT USED

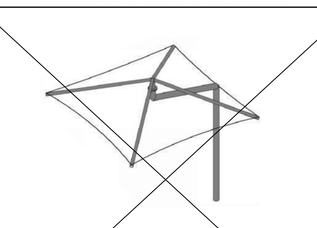

STRUCTURE MODEL:	DSA1241414-22	SEE SHEET 15.1-1000
MAX. SIZE:	14' x 14' x 12'	
MAX. AREA:	196 SQ. FT.	
MAX. OCCUPANCY:	13 PERSONS	
STRUCTURE MODEL:	DSA1242020-22	SEE SHEET 16.1-1000
MAX. SIZE:	20' x 20' x 12'	
MAX. AREA:	400 SQ. FT.	
MAX. OCCUPANCY:	26 PERSONS	

FOR DSA 103 TESTING & INSPECTIONS SAMPLE, SEE PC T-3.0 & PC T-4.0

SINGLE POST PYRAMID CANTILEVER

REGISTERED PROFESSIONAL ENGINEER
MARK LANE
No. 3693
STRUCTURAL
STATE OF CALIFORNIA
10/18/2023

LICENSED ARCHITECT
DAVID HIGGINS
C19168
10-31-25
RENEWAL DATE
STATE OF CALIFORNIA

THESE PLANS AND SPECIFICATIONS ARE THE PROPERTY OF USA SHADE AND FABRIC STRUCTURES AND SHALL NOT BE REPRODUCED WITHOUT THEIR WRITTEN

USASHADE & Fabric Structures

CORPORATE HEADQUARTERS
2580 ESTERS BLVD. SUITE 100
DFW AIRPORT, TX, 75261
800-966-5005

CERTIFICATIONS:
IAS CERTIFICATION No: FA-428
CLARK COUNTY MANUFACTURER CERTIFICATION NUMBER (NEVADA): 355

CUSTOMER:
Washington U.S.D.

PROJECT NAME:
River City High School

LOCATION:
1 Raider Lane
West Sacramento, CA 95691

MODEL NUMBER:

APPROVED
DIV. OF THE STATE ARCHITECT
APP: 04-121917 PC
REVIEWED FOR
SS ☑ FLS ☑ ACS ☑ CG ☐
DATE: 10/30/2023

STRUCTURE TYPE:

SCALE : VARIES

DRAWING SIZE:
D

PRE-CHECK (PC) DOCUMENT
Code : 2022 CBC
A separate project application for construction is required.

Eng. By :	DWH	2/14/23
Design By :	DWH	2/14/23
Approved By :	DWH	2/14/23

DRAWING DESCRIPTION:

DWG. **UNIT SELECTION**

SHEET **T-2.0**

REV.

IDENTIFICATION STAMP
DIV. OF THE STATE ARCHITECT
APP: 02-122281 INC:
REVIEWED FOR
SS ☑ FLS ☑ ACS ☑
DATE: 03/19/2024

GENERAL NOTES

1.- SPECIAL INSPECTION REQUIREMENTS SHALL FOLLOW THE ATTACHED SAMPLE TEST AND INSPECTION LIST (T & I LIST) APPROVED BY DSA. THE SHOP WELDING INSPECTION SHALL INCLUDE WELDING OF ALL STEEL MEMBERS AND IDENTIFICATION OF STEEL THROUGH MILL CERTIFICATE OR MATERIAL TESTING, UNCERTIFIED STEEL SHALL BE TESTED TO THE REQUIREMENTS OF CBC 2022 CHAPTER 17A. THE FIELD SPECIAL INSPECTION SHALL INCLUDE COMPRESSION CYLINDER TESTS FOR THE CONCRETE FOUNDATION.

2.- STRUCTURE SHALL BE IN THE LOCATION SHOWN ON THE SITE SPECIFIC DSA APPLICATION DRAWING.

3.- FOUNDATION DESIGN BASED ON CBC 2022, TABLE 1806A.2, SOIL CLASS 5 (ALLOWABLE FOUNDATION PRESSURE 1500 PSF)

4.- DESIGN PER FOLLOWING CODES: CBC 2022(CHAPTER 35), ASCE 7-16, AISC 360-16, AISC 341-16, ACI 318-19, ASCE 55-16 & ASCE 19-16

STRUCTURAL STEEL
1.- FABRICATION OF THE STEEL STRUCTURES SHALL BE PERFORMED BY SHADE STRUCTURES OR AN AUTHORIZED LICENSEE. MATERIAL TESTING (OR MILL CERTIFICATES) AND INSPECTION OF WELDING SHALL BE CONDUCTED PER CBC 2022 SECTIONS 1704A, 1705A, 1705A.2, AND TABLE 1705A.2.1.

2.- ONLY CALIFORNIA LICENSED CONTRACTORS AUTHORIZED BY SHADE STRUCTURES SHALL INSTALL THE SHADE STRUCTURES.

3.- ALL WORK SHALL CONFORM TO CBC 2022 EDITION, TITLE 24, CALIFORNIA CODE OF REGULATIONS (CCR)

4.- ALL GALVANIZED STEEL TUBE PRODUCTS MANUFACTURED BY ALLIED TUBE & CONDUIT FOR THIS STRUCTURE SHALL BE, AND CONFORM TO ASTM A500-16 GRADE C, IN ITS' ENTIRETY.
TYPICAL MECHANICAL PROPERTIES ARE:
ROUND TUBE GRADE C 46,000 PSI YIELD STRESS MINIMUM / 62,000 PSI TENSILE STRESS MINIMUM

5.- ALL STRUCTURAL SHAPES SHALL BE COLD FORMED HSS ASTM A500 GRADE C, UNLESS OTHERWISE NOTED. TYPICAL MECHANICAL PROPERTIES ACHIEVED FOR HSS PRODUCTS:
SQUARE AND RECTANGULAR 50,000 PSI YIELD STRESS / 62,000 PSI TENSILE STRESS
ROUND PIPE 50,000 PSI YIELD STRESS / 62,000 PSI TENSILE STRESS

6.- ALL PLATES PRODUCTS SHALL COMPLY WITH ASTM A572 GRADE 50.

7.- STRUCTURAL STEEL SHALL BE DETAILED, FABRICATED AND ERECTED IN ACCORDANCE WITH A.I.S.C. SPECIFICATIONS.

8.- ALL WELDING TO CONFORM WITH AMERICAN WELDING SOCIETY STANDARDS AND SHALL BE INSPECTED BY AN AWS/CWI INSPECTOR. AWS D1.1 FOR HOT ROLLED. AWS D1.3 FOR SHEET/COLD FORMED. AWS D1.8 SEISMIC SUPPLEMENT.

9.- ALL FULL PENETRATION WELD SHALL BE CONTINUOUSLY INSPECTED PER AWS D1.1 & D1.8.

10.- SHOP CONNECTIONS SHALL BE WELDED UNLESS NOTED OTHERWISE. ALL FILLET WELDS SHALL BE A MINIMUM OF 3/16" ER70SX ELECTRODES UNLESS OTHERWISE NOTED. GMAW IS ACCEPTABLE.

11.- ALL STAINLESS STEEL BOLTS SHALL COMPLY WITH ASTM F-593, YIELD STRENGTH= 65 KSI, TENSILE STRENGTH=100 KSI MINIMUM, ALLOY GROUP 2, CONDITION CW1. ALL NUTS SHALL COMPLY WITH ASTM F-594 ALLOY GROUP 2, CONDITION CW1. REFERRING TO RCSC, ASTM F-593 IS NOT CONSIDERED AS HIGH STRENGTH BOLTS. BOLTS SHALL BE TIGHTENED TO A SNUG TIGHT CONDITION (ST).

12.- ALL STRUCTURAL STEEL (ITEMS FROM NOTE 5) SHALL BE POWDER COATED WITH ONE SHOP COAT (2.5 MILS MIN.) OF ZINC-RICH PRIMER, UNDERCOAT, AND FINISH COAT, OR EQUIVALENT PAINT SYSTEM. THIS COAT IS A WEATHER RESISTANT POWDER COATING BASED ON POLYESTER TGIC (MANUFACTURED BY SHERWIN WILLIAMS, ASKO NOBEL, PPG OR TIGER DRYLAC). TO ACHIEVE OPTIMUM ADHESION, IT IS RECOMMENDED THAT THE PROPER TREATMENT AND DRYING TAKE PLACE BEFORE COATING. POLYESTER POWDER (TGIC) SPECIFICATIONS SHALL BE AS FOLLOWS:
- PENCIL HARDNESS (ASTM D-3363). - HUMIDITY (ASTM D-2247).
- SOLVENT RESISTANCE (PCI METHOD) - 50 DBL RUBS SL. SOFTNESS.

13.- ALL STEEL ROUND TUBING (ITEMS FROM NOTE 4) SHALL BE TRIPLE COATED FOR RUST PROTECTION USING THE IN-LINE ELECTROPLATING COAT PROCESS. TUBING SHALL BE INTERNALLY COATED WITH ZINC AND ORGANIC COATINGS TO PREVENT CORROSION AS MANUFACTURED BY ALLIED TUBE & CONDUIT.

14.- ALL EXPOSED STEEL FASTENERS SHALL BE STAINLESS STEEL (TYPE 304 MINIMUM), HOT DIP GALVANIZED (ASTM A153, CLASS D MINIMUM OR ASTM F2329) AS APPLICABLE, OR PROTECTED WITH CORROSION PREVENTIVE COATING THAT DEMONSTRATED NO MORE THAN 2% OF RED RUST IN MINIMUM 1,000 HOURS OF EXPOSURE IN SALT SPRAY TEST PER ASTM B117. ZINC-PLATED FASTENERS DO NOT COMPLY WITH THIS REQUIREMENT.

CONCRETE SPECIFICATION
1.- CONCRETE SHALL BE SAMPLED AND TESTED PER CBC 2022 SECTION 1903A & SHALL BE INSPECTED PER SECTION 1903A.

2.- CONCRETE TO BE F'c= 4500 PSI, TYPE V CEMENT PLUS POZZOLAN OR SLAG CEMENT, MAXIMUM WATER/CEMENT RATIO OF 0.45. PER ACI 318-19 CHAPTER 19. (NO ADMIXTURES CONTAINING CALCIUM CHLORIDE WILL BE USED.) REINFORCING STEEL SHALL CONFORM TO ASTM A-615 GRADE 60 AND TO BE Fy= 60000 PSI , MIN. GR. 60. ALSO COATED ACCORDING TO ASTM A767/ A767M, STANDARD SPECIFICATION FOR ZINC-COATING (GALVANIZED) STEEL BARS FOR CONCRETE REINFORCEMENT.

3.- ALL ANCHOR BOLTS SET IN NEW CONCRETE (WHEN APPLICABLE) SHALL COMPLY WITH ASTM F-1554 GRADE 36 (GALVANIZED PER ASTM A153, CLASS D MINIMUM OR ASTM F2329).
ANCHOR BOLTS DIAMETER NEEDS TO BE AS FOLLOW:
A) ANCHOR BOLT Ø1 1/4"

4.- CERTIFIED MILL TEST REPORTS ARE TO BE PROVIDED FOR EACH SHIPMENT OF REINFORCEMENT.

5.- ALL NON-SHRINK GROUT SHALL HAVE A MINIMUM 28 DAYS COMPRESSIVE STRENGTH OF 5000 PSI, AND SHALL COMPLY THE REQUIREMENTS OF ASTM C109, ASTM C939, ASTM C1090, ASTM C1107, WHEN APPLICABLE.

6.- CONCRETE EXPOSED TO FREEZING-AND-THAWING CYCLES SHALL BE AIR ENTRAINED PER ACI 318 SECTION 19.3.3.

FABRIC SPECIFICATION
1.- FABRIC SHALL BE MANUFACTURED BY MULTIKNIT LTD., WHICH MEETS THE SPECIFICATIONS LISTED ON PAGE 2000, AND SHALL BE FABRICATED FROM POLYETHYLENE MATERIALS. MINIMUM SEAM LENGTH 3/4".

2.- THE FABRIC SHALL RETAIN 80% OF ITS TENSILE AND TEARING STRENGTH AFTER ULTRAVIOLET EXPOSURE PER ASTM G53 USING A 313 NM LIGHT SOURCE FOR 500 HOURS WHILE MOISTENED FOR 1 HOUR EVERY 12 HOURS.

3.- PROVIDE CERTIFICATION BY MANUFACTURER AND STATE FIRE MARSHAL TO SCHOOL'S DISTRICT INSPECTOR OF RECORD AT SITE SPECIFIC INSTALLATION. COPY OF FIRE CERTIFICATION SHALL BE SENT TO DSA.

4.- FABRIC SHALL REQUIRE ANNUAL INSPECTION AND MAINTENANCE BY THE DISTRICT. FIRE TEST ON FABRIC. NFPA 701 TEST 2 AND ASTM E 84 EXTENDED 30 MINUTES TEST. FLAME SPREAD INDEX (FSI): 10. SMOKE DEVELOPED INDEX (SDI): 50. FABRIC IS ACCEPTABLE FOR USE IN WILDLIFE URBAN INTERFACE AREA.

5.- FABRIC TOP NEEDS TO BE REMOVED IF SNOW EXCEEDING 5 PSF ARE ANTICIPATED, FABRIC TOP NEEDS TO BE REMOVED IF WINDS EXCEEDING 115 MPH ARE ANTICIPATED.

6.- A VISUAL INSPECTION LOOKING FOR TEAR AND ABNORMAL WEAR IN FABRIC MATERIAL AND THREAD IS REQUIRED PRIOR TO RE-INSTALLATION. USA SHADE & FABRIC STRUCTURES SHALL BE NOTIFIED IF SIGNIFICANT DAMAGE IS PRESENT BEFORE RE-INSTALLATION.

AIRCRAFT CABLE
1.- FOR FABRIC ATTACHMENT USE 3/8" 7x19 GALV. CABLE PER ASTM A1023/A1023M, WITH A BREAKING STRENGTH VALUE OF 14,400 LBS. CABLE SHALL BE TENSIONED TO 300 LBS MINIMUM AND 500 LBS MAXIMUM. THE MAXIMUM CALCULATED CABLE ALLOWABLE CAPACITY IS Sa=4909 LB.

2.- CABLES SHALL BE FED THROUGH THE FABRIC SLEEVES AROUND THE PERIMETER OF THE CANOPY AND TENSIONED UNTIL THE FABRIC PANELS (DESIGNED PURPOSELY UNDERSIZED) REACH A TAUT APPEARANCE. ANY LONG TERM CABLE SAG SHALL BE MINIMIZED DURING THE MAINTENANCE RE-TIGHTING VISITS AS REQUIRED.

MAXIMUM OCCUPANT LOAD (PER CBC 2022 TABLE 1604A.5)
-K-12: 250 PERSONS
-PUBLIC ASSEMBLY: 300 PERSONS
-EDUCATIONAL OCCUPANCIES
ABOVE 12TH GRADE: 500 PERSONS

CBC PC DESIGN NOTES

BUILDING CODE CBC 2022 (BASED ON IBC 2021)
FLOOR LIVE LOAD N/A
ROOF LIVE LOAD RLL 5 PSF

ALLOWABLE SOIL PRESSURE:
DL + LL (CONC FTG) 1500 PSF
DL + LL + SEISMIC (CONC FTG) 1500 PSF
LATERAL BEARING DESIGN VALUE 100 PSF/FT BELOW NATURAL GRADE, PER TABLE 1806A.2

TWO TIMES THE TABULAR VALUE IS USED (200 PSF/FT)
PER CBC SECTION 1806A.3.4.
ALLOWABLE PIER FRICTIONAL RESISTANCE 250 PSF MAXIMUM
BASED ON SECTION 1810A.3.3.1.4 (ONE-SIXTH OF THE BEARING VALUE).
UPLIFT FRICTIONAL RESISTANCE HAVE A SAFETY FACTOR OF 3.

ROOF SNOW LOAD 5 PSF
ICE LOAD ZERO PSF
FLOOD HAZARD AREA ZONE X
WHEN A SITE SPECIFIC PROJECT IS LOCATED IN A FLOOD ZONE OTHER THAN ZONE X, A LETTER STAMPED AND SIGNED FROM A SOILS ENGINEER IS NEEDED TO VALIDATE THE ALLOWABLE SOIL VALUES SPECIFIED IN THE PC ARE STILL APPLICABLE.

WIND DESIGN DIRECTIONAL PROCEDURE: ASCE 7-16, SECTION 27.3.2
NOTE: WIND DESIGN IS LIMITED TO UNOBSTRUCTED CLEAR FLOW CONDITION
-BASIC DESIGN WIND SPEED (3 SEC GUST) V 115 MPH
-ASD WIND LOAD (CBC 2022 SEC. 1603A.1.4) V_{ASD} 90 MPH
-WIND EXPOSURE FACTOR C
-TOPOGRAPHIC FACTOR Kzt 1
-RISK CATEGORY II
-VELOCITY PRESSURE EXPOSURE COEFFICIENT Kz 0.85
-VELOCITY PRESSURE qz 24.46 PSF

SEISMIC DESIGN:
-SITE CLASS D
NOTE: UNLESS A SITE-SPECIFIC GROUND MOTION HAZARD ANALYSIS IS PERFORMED, THE SM1 VALUE INCREASED BY 50% SHALL BE LESS THAN THE DESIGN CRITERIA STATED HEREIN.

SS 3.00g
S1 1.389g
-SPECTRAL RESPONSE COEFFICIENTS SDS 2.00
SD1 1.39
-LATERAL FORCE RESISTING SYSTEM G.2 ORDINARY CANTILEVERED COLUMN SYSTEM.

-SEISMIC IMPORTANCE FACTOR Ie 1.0
-DESIGN BASE SHEAR AT BASE V 3072 LB
-SEISMIC RESPONSE COEFFICIENTS Cs 1.6
-RESPONSE MODIFICATION FACTOR R 1.25
-ANALYSIS PROCEDURE EQUIVALENT LATERAL FORCE
-RISK CATEGORY II
-SEISMIC DESIGN CATEGORY E
-SITE COEFFICIENT CATEGORY Fa 1.2
Fv 1.5
-REDUNDANCY FACTOR ρ 1.3

GEOHAZARD REPORT IS NOT REQUIRED FOR OPEN FABRIC STRUCTURES 1,600 SQF OR LESS COMPLYING WITH THE REQUIREMENTS OF IR A-4 SECTION 3.1.1. OPEN FABRIC SHADE STRUCTURES GREATER THAN 1,600 SQUARE FEET UP TO A MAXIMUM OF 4,000 SQUARE FEET AND COMPLYING WITH THE REQUIREMENTS NOTED IN IR A-4 SECTION 3.1.1 DO NOT REQUIRE A GEOHAZARD REPORT PROVIDED A GEOTECHNICAL REPORT INDICATES THAT NO LIQUEFACTION POTENTIAL EXISTS.

ARCHITECT OF RECORD TO DETERMINE IF SPECIFIC SITE IS IN GEOLOGIC HAZARD ZONE. GEOHAZARD REPORT REQUIREMENTS PER DSA IR A-4.

PC OPTIONS SHALL NOT INCLUDE LIQUEFIABLE SOIL (EXCEPTION: OPEN FABRIC SHADE STRUCTURES 1,600 SQUARE FEET OR LESS COMPLYING WITH REQUIREMENTS OF IR A-4 SECTION 3.1.1). IF STRUCTURE IS LOCATED IN AN AREA WITH LIQUEFIABLE SOIL OR SITE CLASS F, OVER-THE-COUNTER SUBMITTAL IS NOT ALLOWED AND REGULAR PROJECT SUBMITTAL IS REQUIRED. IF SITE IS NOT IN A MAPPED LIQUEFACTION HAZARD ZONE, IT MAY BE PRESUMED THAT NO LIQUEFACTION HAZARD EXISTS ON THAT SITE UNLESS A SITE-SPECIFIC GEOTECHNICAL REPORT IDENTIFIES SUCH HAZARD.

MINIMUM FOUNDATION SETBACK LIMIT IN ADJACENT SLOPE: THE DEPTH OF REQUIRED PIER EMBEDMENT SHALL START FROM AN ELEVATION THAT CORRESPONDS WITH A HORIZONTAL CLEAR DISTANCE OF 14 FEET THAT INTERSECT WITH THE SLOPE (DAYLIGHTING). IF SETBACK LIMITS ARE SMALLER THAN CBC REQUIRES, A SITE-SPECIFIC SOILS REPORT IS REQUIRED.

MINIMUM CLASS 2 PROJECT INSPECTOR REQUIRED.

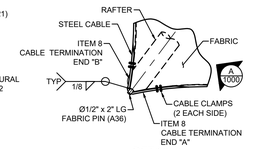

DETAIL 1
REFER TO TOP VIEW

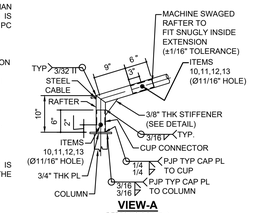

VIEW-A
REFER TO DETAIL-1

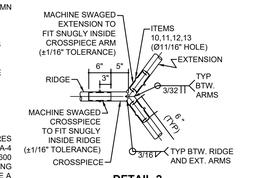

DETAIL-2
REFER TO TOP VIEW

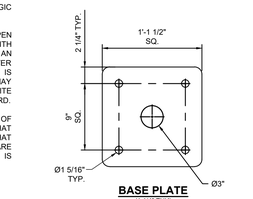

BASE PLATE
(1 1/4" THK)
(TYP. FOR RBP COLUMNS)

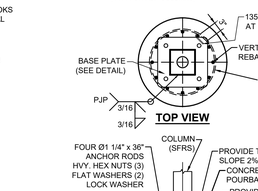

TOP VIEW

TOP VIEW

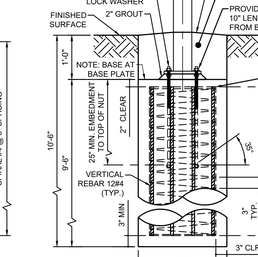

DRILLED PIER FOOTING-PIH
(EMBEDDED, PIH)
(USE FOR NON-CONSTRAINED CASES)

DRILLED PIER FOOTING-RBP
(RECESSED BASE PLATE, RBP)
(USE FOR NON-CONSTRAINED CASES)
(OPTIONAL)

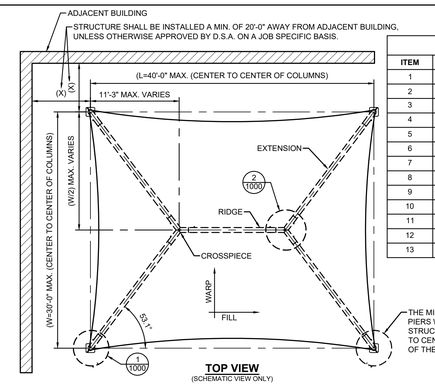

TOP VIEW
(SCHEMATIC VIEW ONLY)

THE MINIMUM CLEARANCE REQUIRED BETWEEN DRILLED PIERS WHEN PLACING MULTIPLE OPEN FABRIC SHADE STRUCTURES ADJACENT TO EACH OTHER, FROM CENTER TO CENTER, IS THREE TIMES THE LEAST HORIZONTAL DIMENSION OF THE PIER PER CBC 2022 SEC. 1810A.2.5.

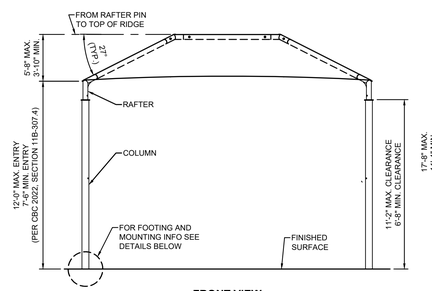

FRONT VIEW
(SCHEMATIC VIEW ONLY)

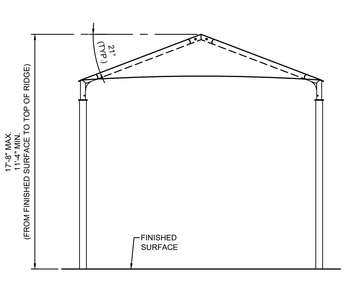

SIDE VIEW
(SCHEMATIC VIEW ONLY)

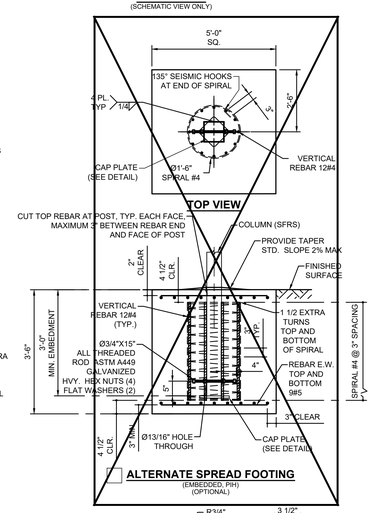

ALTERNATE SPREAD FOOTING
(EMBEDDED, PIH)
(OPTIONAL)

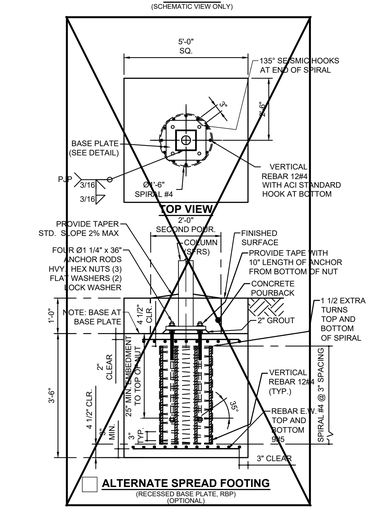

ALTERNATE SPREAD FOOTING
(RECESSED BASE PLATE, RBP)
(OPTIONAL)

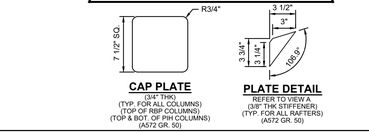

CAP PLATE
(3/4" THK)
(TYP. FOR ALL COLUMNS)
(TOP OF RBP COLUMNS)
(TOP & BOT. OF PIH COLUMNS)
(A572 GR. 50)

PLATE DETAIL
REFER TO VIEW A
(3/8" THK STIFFENER)
(TYP. FOR ALL RAFTERS)
(A572 GR. 50)

LIST OF MATERIALS			
ITEM	QTY	DESCRIPTION	MATERIAL
1	4	COLUMN	HSS 7.0 x 7.0 x 0.250
2	4	CUP CONNECTOR (6" LG)	HSS 4.5 x 0.375
3	4	RAFTER (GALVANIZED STEEL TUBE)	5.00 GA 7 RD. TUBE (HSS 5.0 x 0.188)
4	4	EXTENSION (GALVANIZED STEEL TUBE)	5.00 GA 7 RD. TUBE (HSS 5.0 x 0.188)
5	2	CROSSPIECE (GALVANIZED STEEL TUBE)	5.00 GA 7 RD. TUBE (HSS 5.0 x 0.188)
6	1	RIDGE (GALVANIZED STEEL TUBE)	5.00 GA 7 RD. TUBE (HSS 5.0 x 0.188)
7	1	FABRIC TOP	FR COLOURSHADE 190/F5
8	1	Ø3/8" CABLE	GALVANIZED STEEL
9	4	Ø3/8" CABLE CLAMP	GALVANIZED STEEL
10	14	Ø5/8"-11NC x 6 1/2" HEX BOLT (ST)	316 SS
11	14	Ø5/8"-11NC HEX NUT	316 SS
12	28	Ø5/8" FLAT WASHER	316 SS
13	14	Ø5/8" SPLIT LOCK WASHER	316 SS

THESE PLANS AND SPECIFICATIONS ARE THE PROPERTY OF USA SHADE AND FABRIC STRUCTURES AND SHALL NOT BE REPRODUCED WITHOUT THEIR WRITTEN PERMISSION.

USASHADE & Fabric Structures
CORPORATE HEADQUARTERS
2580 ESTERS BLVD. SUITE 100
DFW AIRPORT, TX. 75261
800-966-5005

CERTIFICATIONS:
IAS CERTIFICATION No: FA-428
CLARK COUNTY MANUFACTURER CERTIFICATION NUMBER (NEVADA): 355

CUSTOMER:
Washington U.S.D.

PROJECT NAME:
River City High School

LOCATION:
1 Raider Lane
West Sacramento, CA 95691

MODEL NUMBER:
DSA401304012-22

APPROVED
DIV. OF THE STATE ARCHITECT
APP: 04-121917 PC
REVIEWED FOR
SS ☑ FLS ☑ ACS ☑ CG ☐
DATE: 10/30/2023

STRUCTURE TYPE:
H I P
DSA

SIZE: MAXIMUM
30' x 40' x 12'e MAX.

SCALE : NONE

DRAWING SIZE:
D

PRE-CHECK (PC) DOCUMENT
Code : 2022 CBC
A separate project application for construction is required.

Eng. By :	HH	12/01/22
Design By :	OS	12/01/22
Approved By :	MB	12/01/22

DRAWING DESCRIPTION:
PRODUCT INFORMATION

DWG.
DSA401304012-22

SHEET
7.1-1000

REV.
NC

LICENSED ARCHITECT
DAVID SLOOTMAN
C19168
10-31-25
RENEWAL DATE
STATE OF CALIFORNIA

REGISTERED PROFESSIONAL ENGINEER
MARK BERG
No. 3693
STRUCTURAL
STATE OF CALIFORNIA
10/18/2023

IDENTIFICATION STAMP
DIV. OF THE STATE ARCHITECT
APP: 02-122281 INC:
REVIEWED FOR
SS ☑ FLS ☑ ACS ☑
DATE: 03/19/2024

Aircraft Cable

Preformed, made in accordance with commercial specifications military and federal specification rope available.

Carbon Steel (Aircraft Cable) - Galvanized cable has the highest strength and greatest fatigue life of the materials offered. It has good to fair corrosion resistance in rural to industrial atmosphere environments. This material is most widely used for small diameter cables. Tin over galvanized cable offers greater corrosion resistance and reduced friction over pulleys.

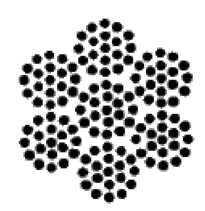

7 x 19

7 x 19		Galvanized
Dia. (In)	Approx. Wt 1000 Ft/lbs	Min. Breaking Strengths (lbs)
3/32	17.	1,000
1/8	29.	2,000
5/32	45.	2,800
3/16	65.	4,200
7/32	86.	5,600
1/4	110.	7,000
9/32	139.	8,000
5/16	173.	9,800
3/8	243.	14,400

Multiknit INTERNATIONAL

190/F5 Fire rated specifications

Standard range

Revision 0 28-Oct-12

Colour	Shade %	UV Block %	Average GSM	Average Warp break strength kgs	Average Elongation %	Average Weft break strength kgs	Average Elongation %	Average Burst Kpa	Average Burst to Mass ratio
Desert Sand	80	92	185	50	40	72	73	156	0.84
Blue	80	85	185	50	40	72	73	156	0.84
Brown	85		185	50	40	72	73	156	0.84
Green	80	85	185	50	40	72	73	156	0.84
Red	80	86	185	50	40	72	73	156	0.84
Silver	80	81	185	50	40	72	73	156	0.84
Terracotta	75	82	185	50	40	72	73	156	0.84
Yellow	80	89	185	50	40	72	73	156	0.84
				110 LB		159 LB		3258 PSF	

CONVERSION TO IMPERIAL UNITS:
185 GSM = .0378 psf
50 KGS = 110 Lb
72 KGS = 159 Lb
156 Kpa = 3258 psf

Notes:
- 190/F5 conforms to The California State Fire Marshal Title 19 Test for Small scale Fabrics
- Tear tests are done using a 50mm wide strip and a cross head speed of 500mm/min
- This report has been compiled using the mean results from all tests conducted on the given sample by our Quality Control Laboratory. the information provided is considered to be a good reflection of the relevant properties of the fabric tested. These results must only be used as an indication of the quality and characteristics of the fabric tested.
Company cannot be held responsible or liable in any way whatsoever should this information differ to that of a registered testing institution.

PP. Deon Joubert
General Manager - Multiknit (Pty) Ltd

Tommy Rogers
Managing Director - Multiknit (Pty) Ltd

FLAME RETARDANT

Fabric Registration

LICENSE NUMBER: F-052001

COLOURSHADE 190/F5

Product Marketed by:

MULTIKNIT (PTY) LTD
BOX 798 WHITE RIVER 1240
MPUMALANGA SOUTH AFRICA, ,

Issue Date : 05/08/2023
Expiration Date : 06/30/2024

This product meets the minimum requirements of flame resistance established by the California State Fire Marshal for products identified in Section 13115, California Health and Safety Code. The scope of the approved use of this product is provided in the current edition of the CALIFORNIA APPROVED LIST OF FLAME RETARDANT CHEMICALS AND FABRICS, GENERAL AND LIMITED APPLICATIONS CONCERNS published by the California State Fire Marshal.

Issued By Cortney Walker
Fire Engineering License Manager
Fire Engineering & Investigations Division

Reviewed and Approved By Patricia Setter
Deputy State Fire Marshal III
Fire Engineering & Investigations Division

OFFICE OF THE STATE FIRE MARSHAL

Please visit calfire.govmotus.org for more information on Licensing and Permitting with CAL FIRE

Page 1 of 1

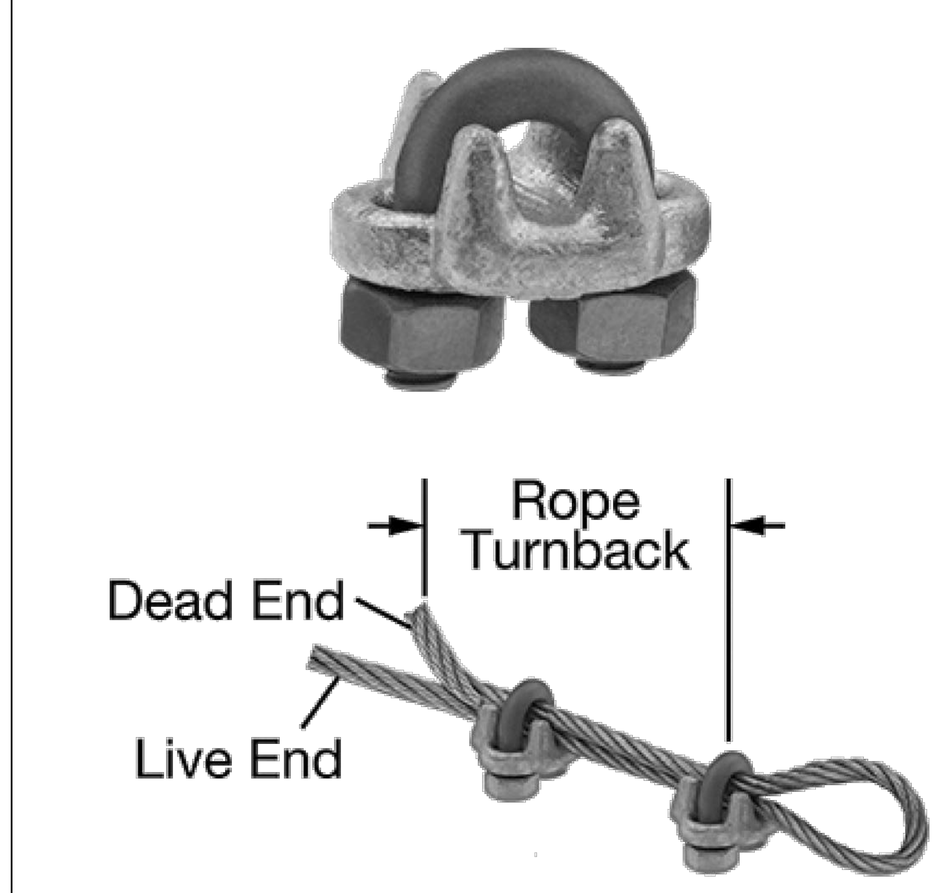

FORGED WIRE ROPE CLAMP

FITTING TYPE ROPE CLAMP
FABRICATION: FORGED
MATERIAL: GALVANIZED STEEL
FOR WIRE ROPE DIAMETER 3/8"
NUMBER OF CLAMPS REQUIRED: 2
ROPE TURNBACK: 6 1/2"
FOR WIRE ROPE CONSTRUCTION 7 × 19
ATTACHMENT TYPE: LOOP
CLAMP:WIDTH 2", HEIGHT 1 15/16", THICKNESS 1 11/16"
REQUIRED INSTALLATION TOOL TORQUE WRENCH
REQUIRED TORQUE 45 FT.-LBS.
CAPACITY 80% OF THE ROPE'S CAPACITY
SPECIFICATIONS MET ASME B30.26, FED. SPEC. FF-C-450

THESE PLANS AND SPECIFICATIONS ARE THE PROPERTY OF USA SHADE AND FABRIC STRUCTURES AND SHALL NOT BE REPRODUCED WITHOUT THEIR WRITTEN PERMISSION.

USASHADE & Fabric Structures®

CORPORATE HEADQUARTERS
2580 ESTERS BLVD. SUITE 100
DFW AIRPORT, TX, 75261
800-966-5005

CERTIFICATIONS:
IAS CERTIFICATION No: FA-428
CLARK COUNTY MANUFACTURER CERTIFICATION NUMBER (NEVADA): 355

CUSTOMER:
Washington U.S.D.

PROJECT NAME:
River City High School

LOCATION:
1 Raider Lane
West Sacramento, CA 95691

MODEL NUMBER:
DSA401304012-22

APPROVED
DIV. OF THE STATE ARCHITECT
APP: 04-121917 PC
REVIEWED FOR
SS ☑ FLS ☑ ACS ☑ CG ☐
DATE: 10/30/2023

STRUCTURE TYPE: H I P DSA

SIZE: MAXIMUM 30' x 40' x 12'e MAX.

SCALE : NONE

DRAWING SIZE: D

PRE-CHECK (PC) DOCUMENT
Code : 2022 CBC
A separate project application for construction is required.

Eng. By :	HH	12/01/22
Design By :	OS	12/01/22
Approved By :	MB	12/01/22

DRAWING DESCRIPTION: SPECIFICATIONS

DWG. DSA401304012-22

SHEET 7.2-2000

REV. NC